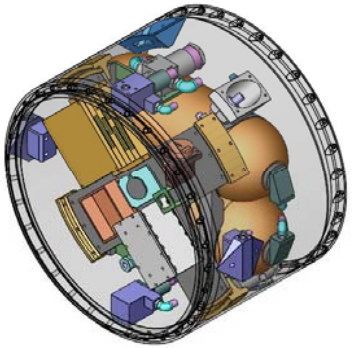

Sounding Rocket Working Group
February 4, 2010

NASA Sounding Rocket Operations Contract (NSROC)

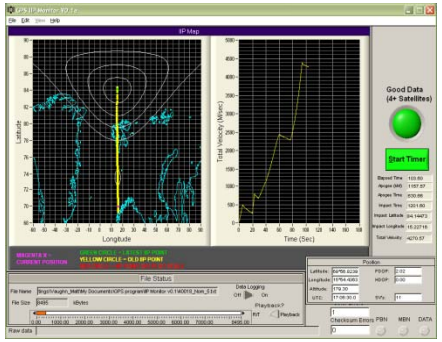

NASA Goddard Space Flight Center

SRWG Agenda - NSROC

NSROC Overview	Rob Maddox
Mission Operations	Jay Scott
Engineering	Ricky Stanfield
Mechanical Engineering	Brian Creighton
Vehicle Engineering	Catherine Hesh
Electrical Engineering	Elton Williams
Flight Performance	Brent Edwards
Guidance Navigation and Control	David Jennings
	Carlos Martinez
Systems Engineering	Don Blaylock
Conclusions	Rob Maddox

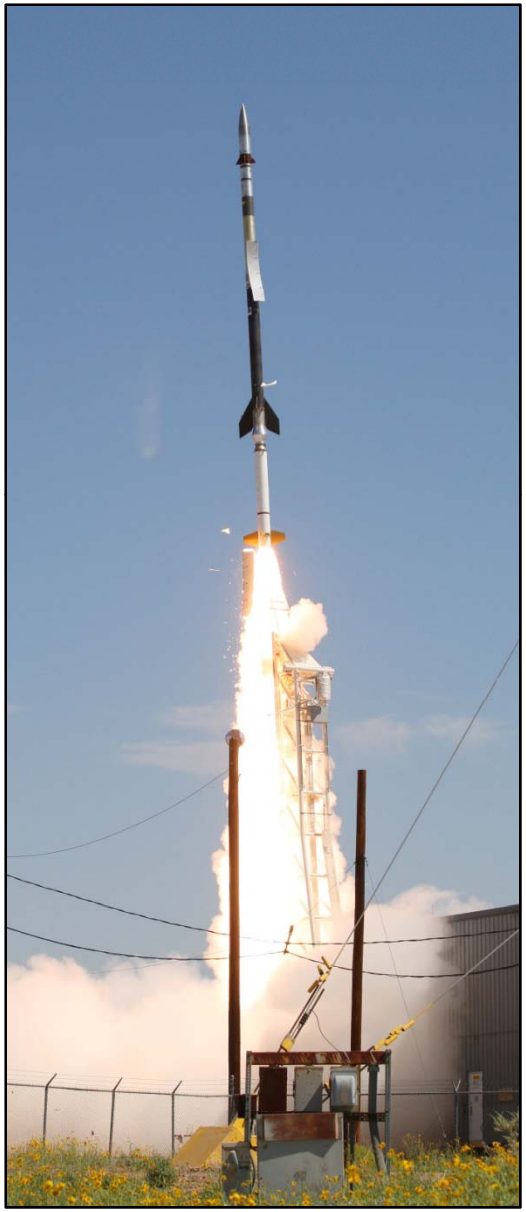

Program Manager

Rob Maddox

Programmatic

- Contract Status
  - Approaching end of NSROC I – June 30
  - Material procurements are slowing down
  - Contract evergreen clause allows us to deliver and invoice up to one year beyond end of contract
  - Phase out plan is near complete
  - Marketing work is phasing out
    - DoD customers are being directed to NASA/SRPO
  - NSROC successfully completed ISO 9001-2000 re-registration audit
  - Collective Bargaining Agreement recently negotiated with Union
- Subcontract Status
  - New subcontracts with ATK and SGT are in place
  - All positions vacated during subcontractor transition have been filled
  - One backfill remains to replace internal promotion
  - Significant orders in place for Rocket Motors (Bristol) and Boost Guidance System Conversions (Ruag)

Programmatic

- Staffing
  - Significant effort to fill open positions over past several months
  - Staffing gaps were supplemented with temporary personnel from other NG sectors
  - Several new engineers on board with fresh enthusiasm for rockets
  - Additional staff added to manufacturing and systems engineering

Programmatic

- Reimbursable Business
  - US Navy Aegis Targets – 7 missions planned for 2010
  - USAF Airborne Laser – 7 missions planned for 2010
  - Efforts started for follow on missions for NGSP (LeClair) and IRVE III (Cheatwood)
- New business marketing has slowed due to end of contract
- Most reimbursable work is now from returning customers
- Several Technical Spinoffs from reimbursable customers
  - RPCS+ Features remote CDI control funded by Aegis BMD
  - GLNMAC production and ACS algorithms developed under DoD projects
- Outreach
  - Continue to support student outreach with 4 co-op students last Fall and this Spring semesters

Mission Operations

Jay Scott

NSROC Operations

- ITAR – International Trade in Arms Regulations
  - Technical Assistance Agreement (TAA) status
    - Currently 10 missions require TAA's
    - 4 completely executed
    - 2 submitted to DDTC (should be approved in 1 or 2 months)
    - 3 in draft process
    - 1 waiting on PI input
    - No impact to schedules
  - Documentation
    - Currently RDM, DR, and MRR packages are considered ITAR controlled technical data
      - Must not be shared with non-US persons
    - Flight data not ITAR controlled per memo from NASA HQ
  - Looking into issue of flight hardware – may be controlled

NSROC Operations

WSMR schedule

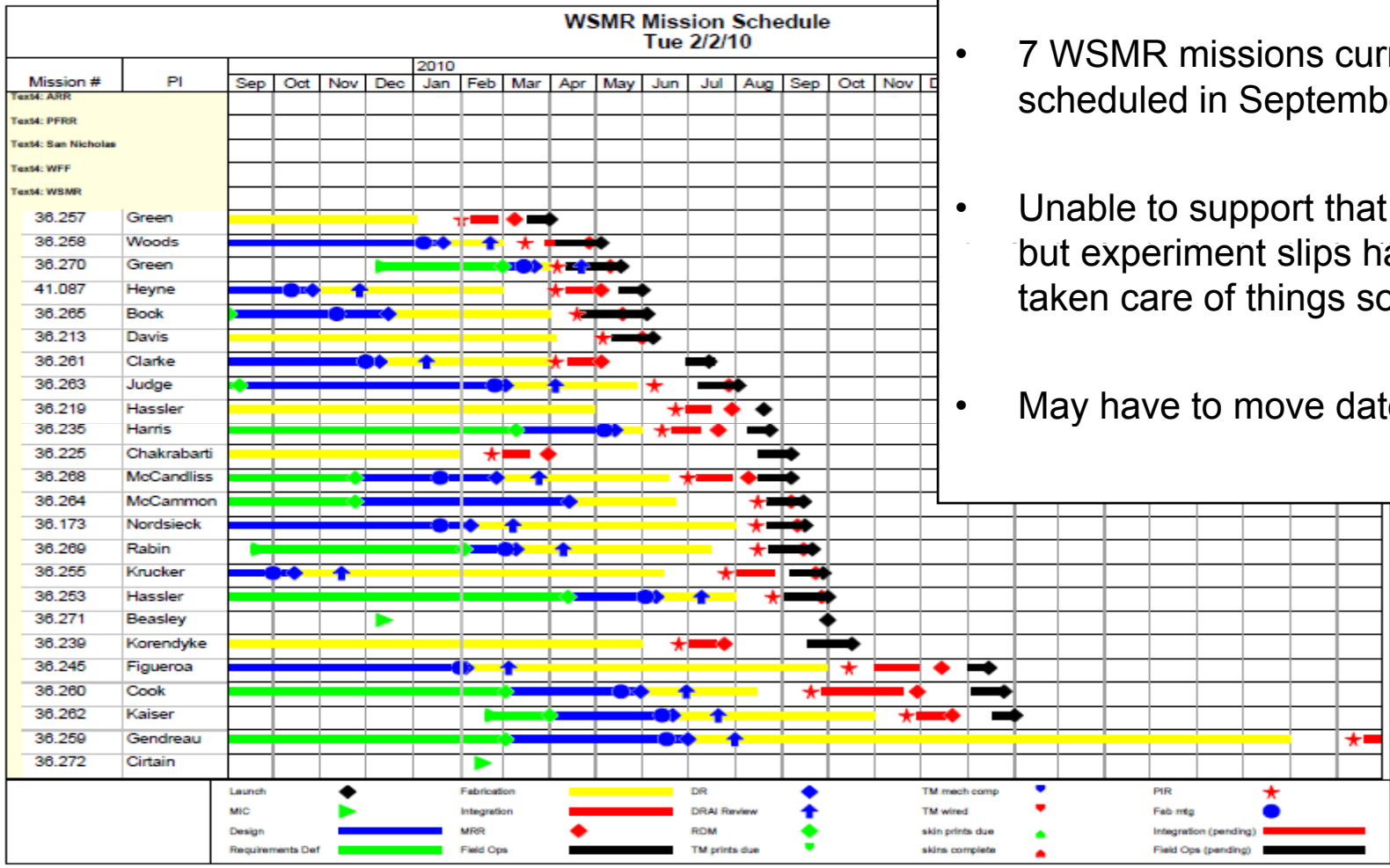

- 7 WSMR missions currently scheduled in September
- Unable to support that many, but experiment slips have taken care of things so far
- May have to move dates

Mission Operations

- Mission Dashboards
  - New tool to assist mission managers to track and report mission cost, schedule, staffing, requirements, and risks
  - Mission Managers will report status on a monthly basis

41.087/Heyne November 09

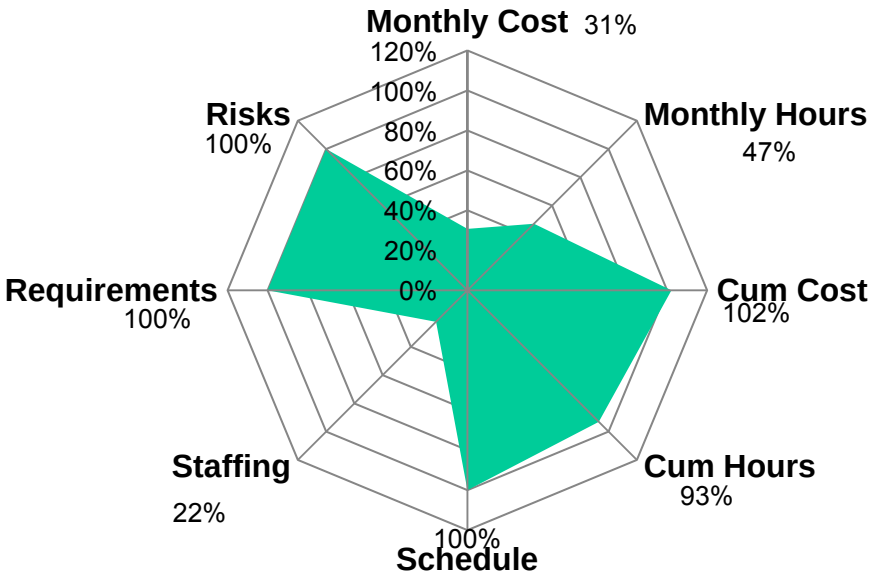

Engineering

Ricky Stanfield

NSROC Engineering Management

- NSROC Engineering Leading Indicators
  - Tracking of seven parameters that are indicators of engineering performance
- NSROC Risk Management Activities
  - Update on risk management efforts across the NSROC program
- Configuration Management
  - Configuration Control Board activities
  - Change Request process update
- Engineering Staffing
  - New engineering leadership team
  - Overview of engineering staffing

Engineering Leading Indicators

As of 1/31/2010

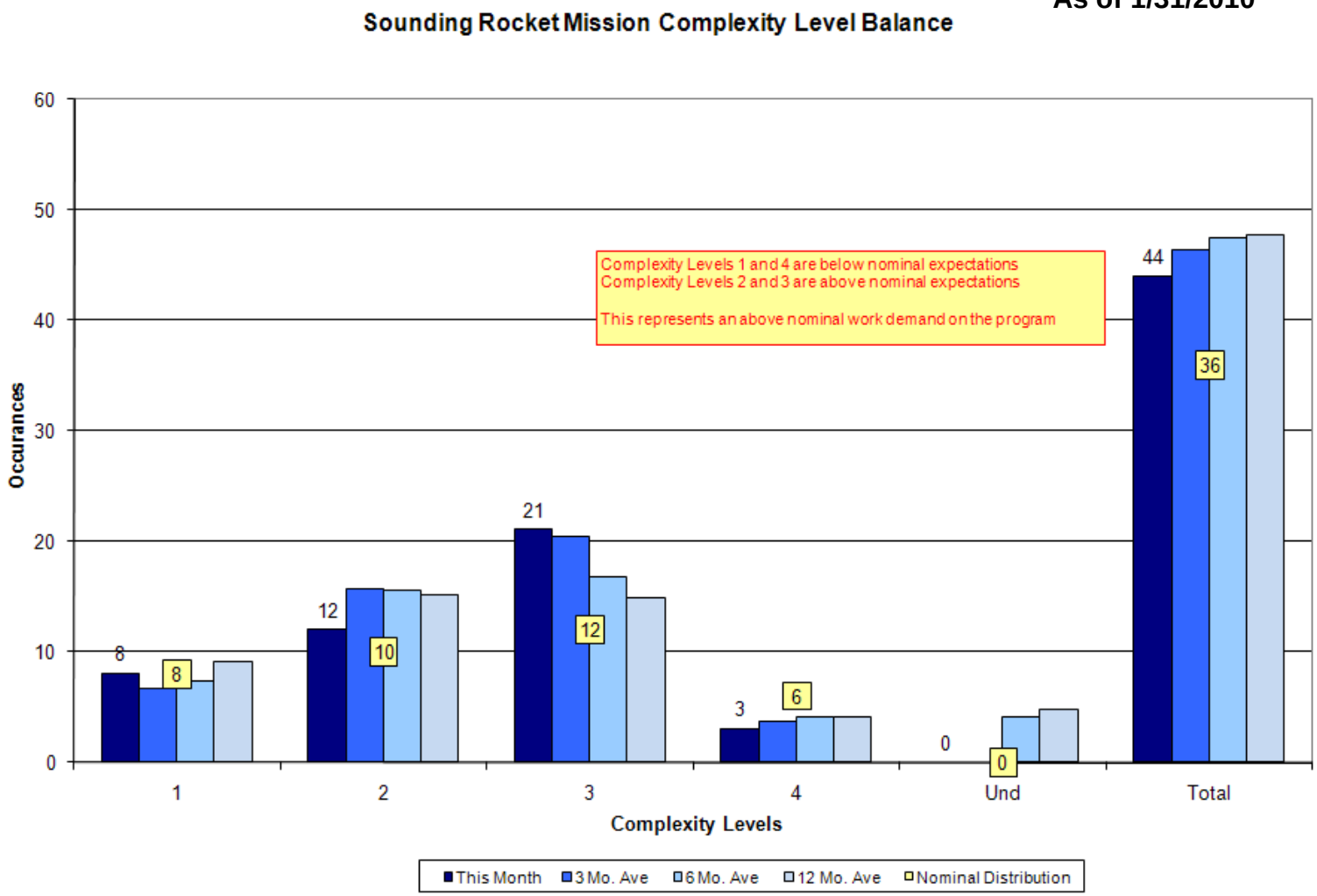

Engineering Leading Indicators

As of 1/31/2010

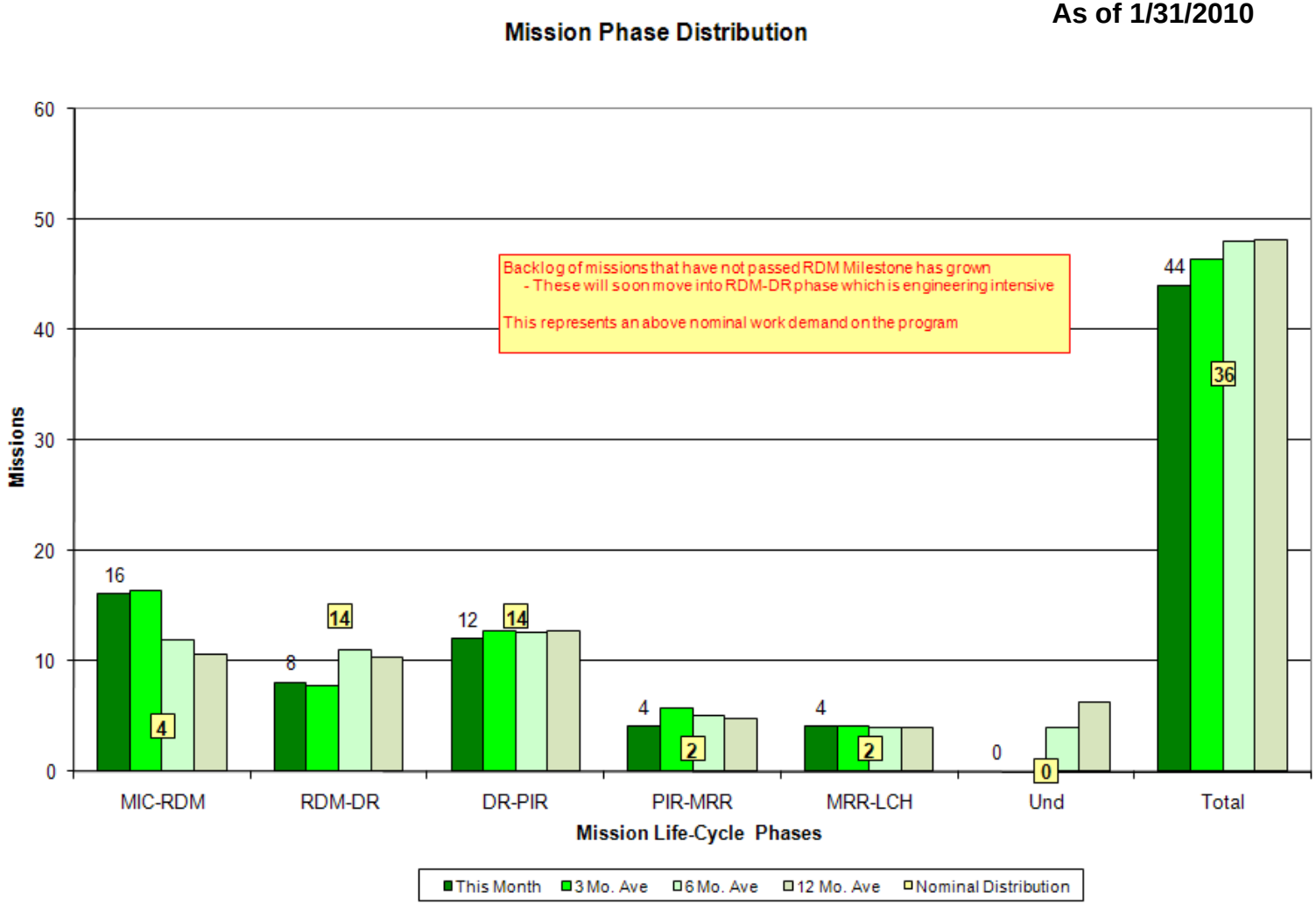

Engineering Leading Indicators

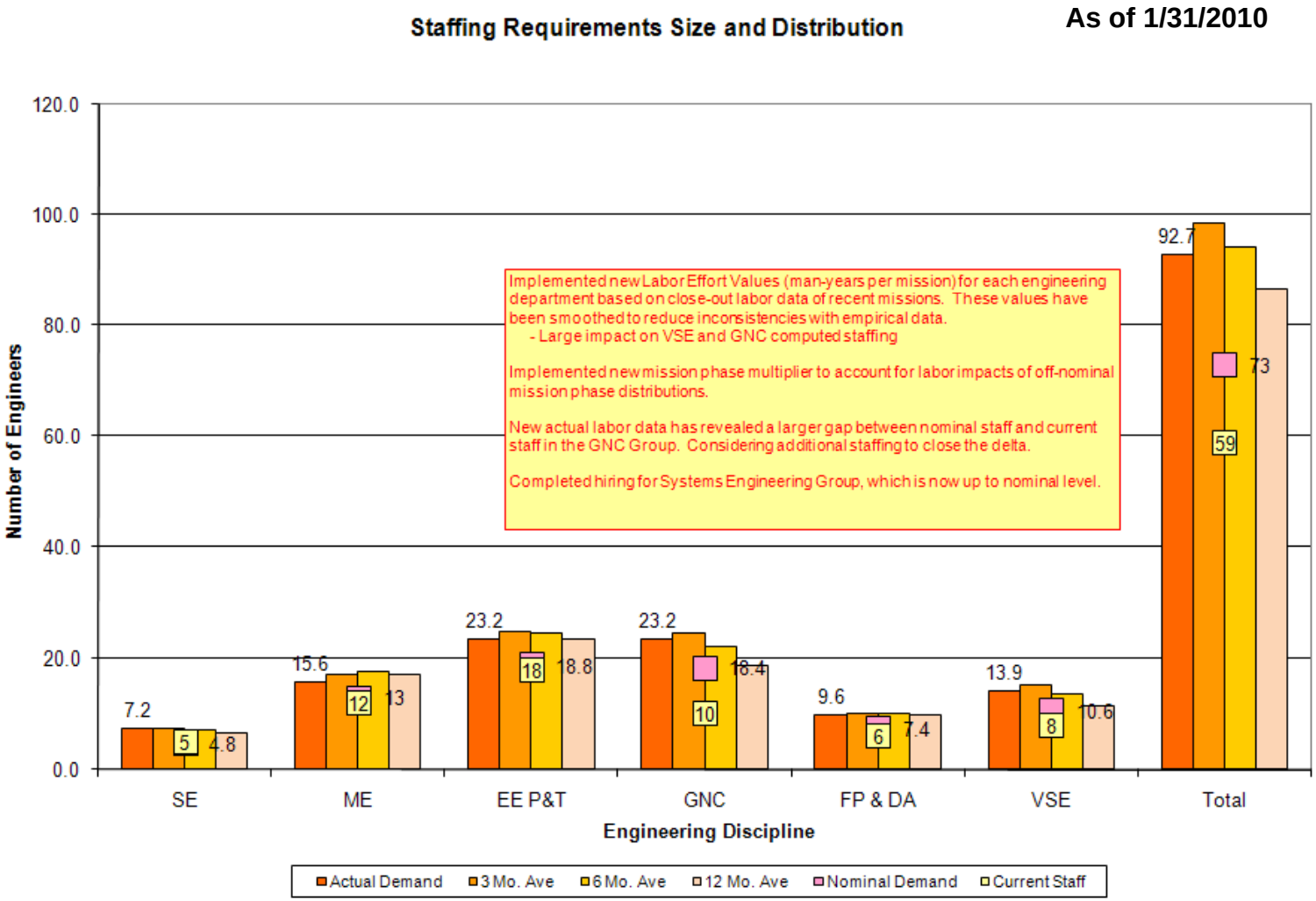

Engineering Leading Indicators

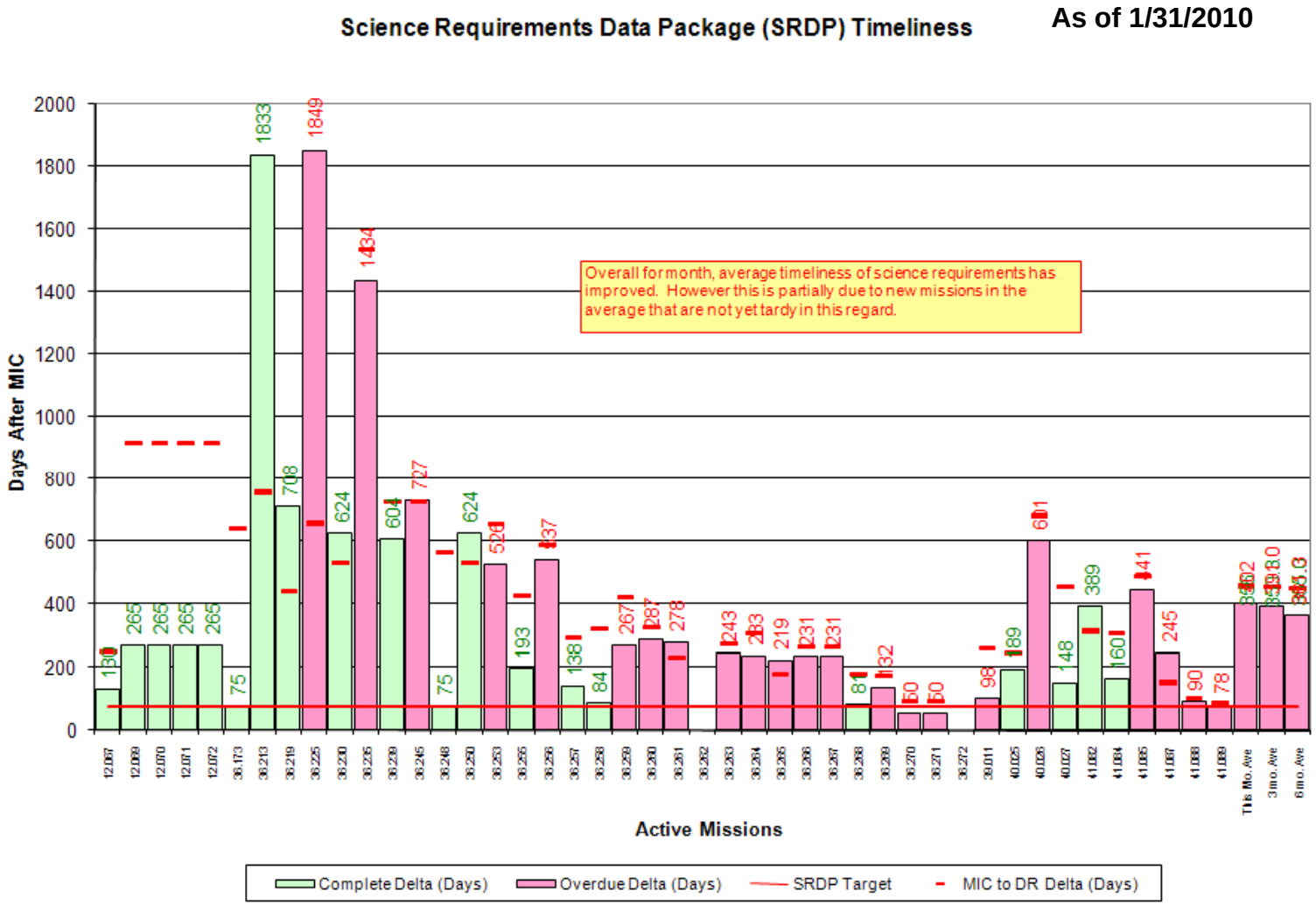

Engineering Leading Indicators

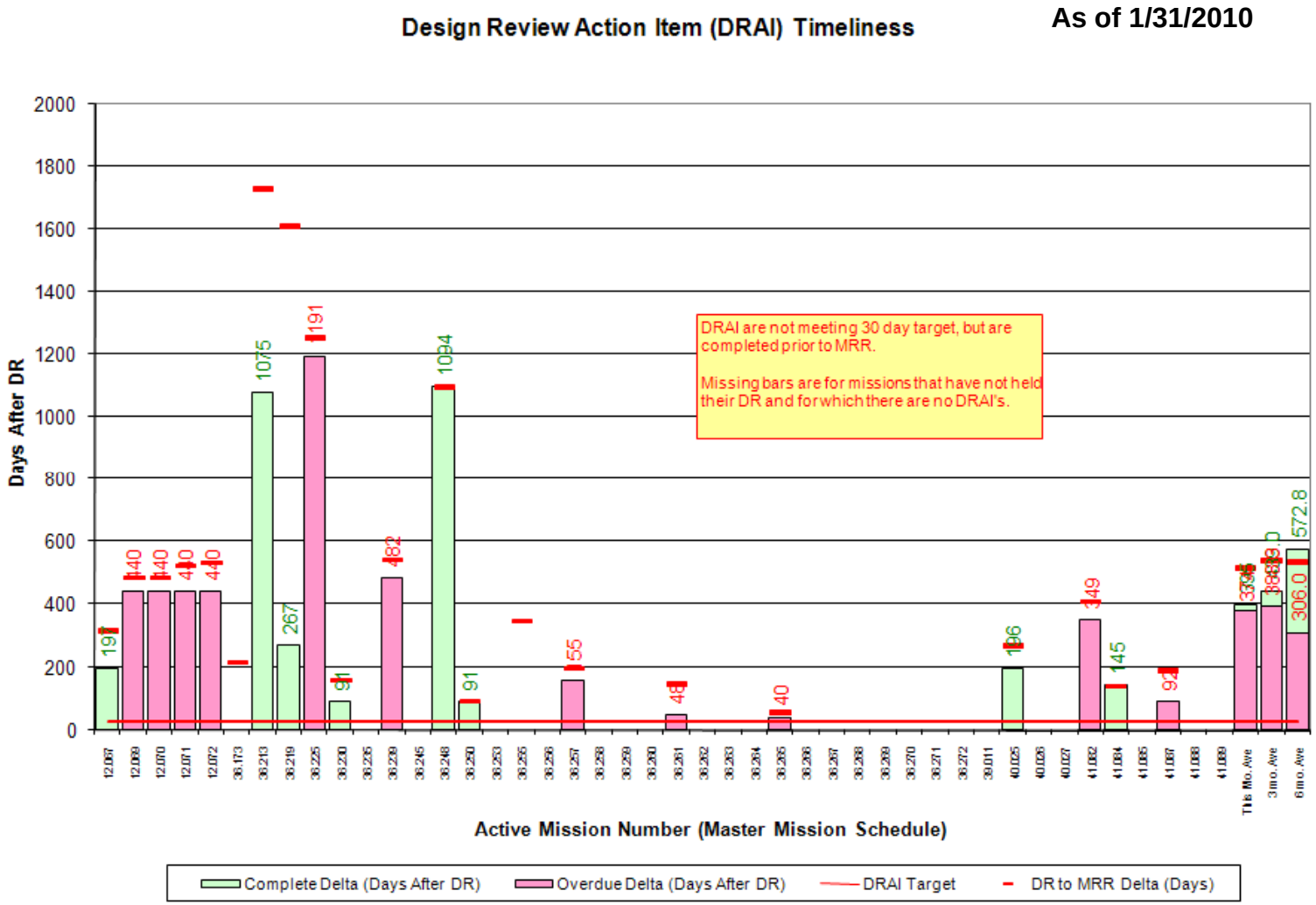

Engineering Leading Indicators

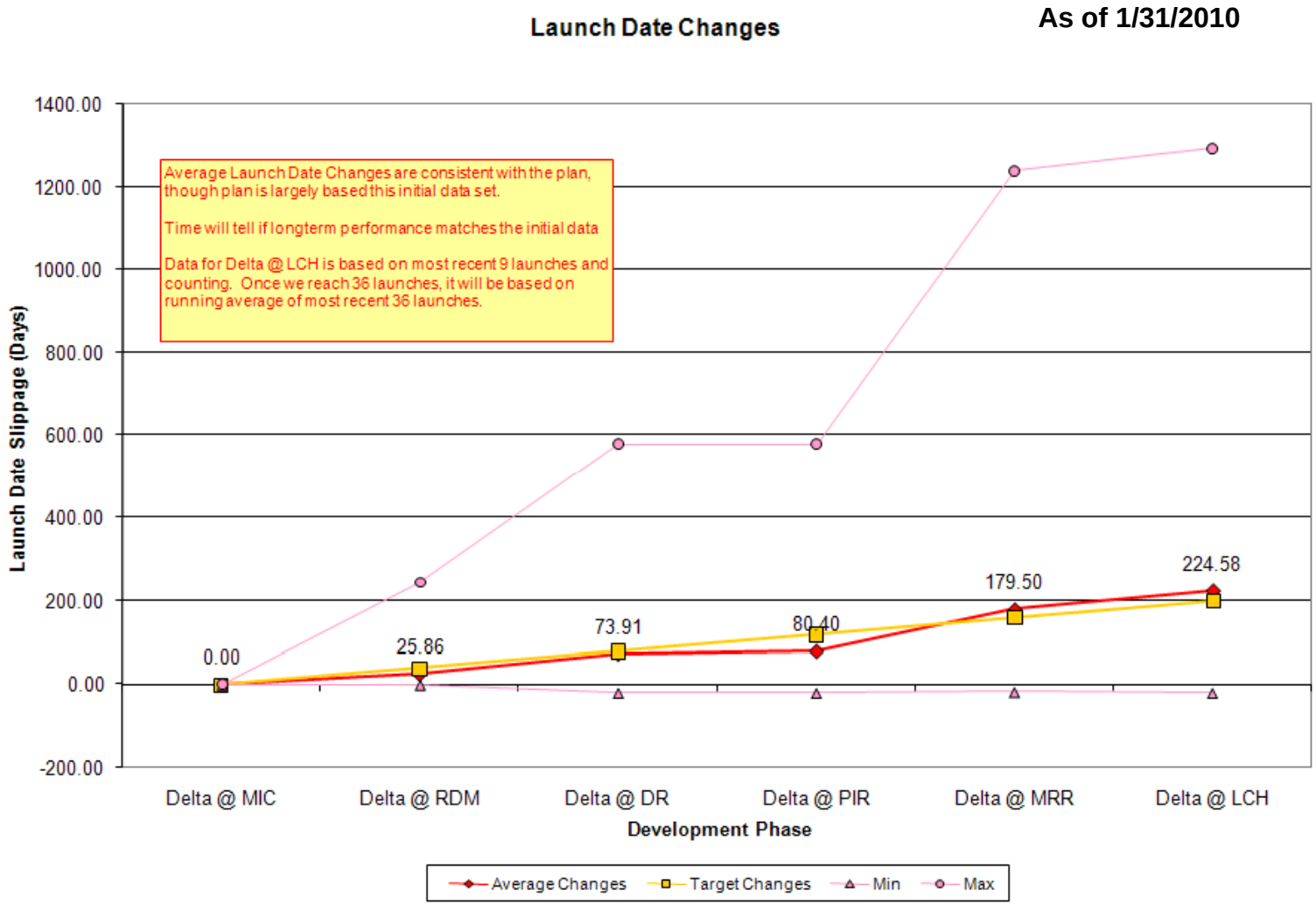

Engineering Leading Indicators

As of 1/31/2010

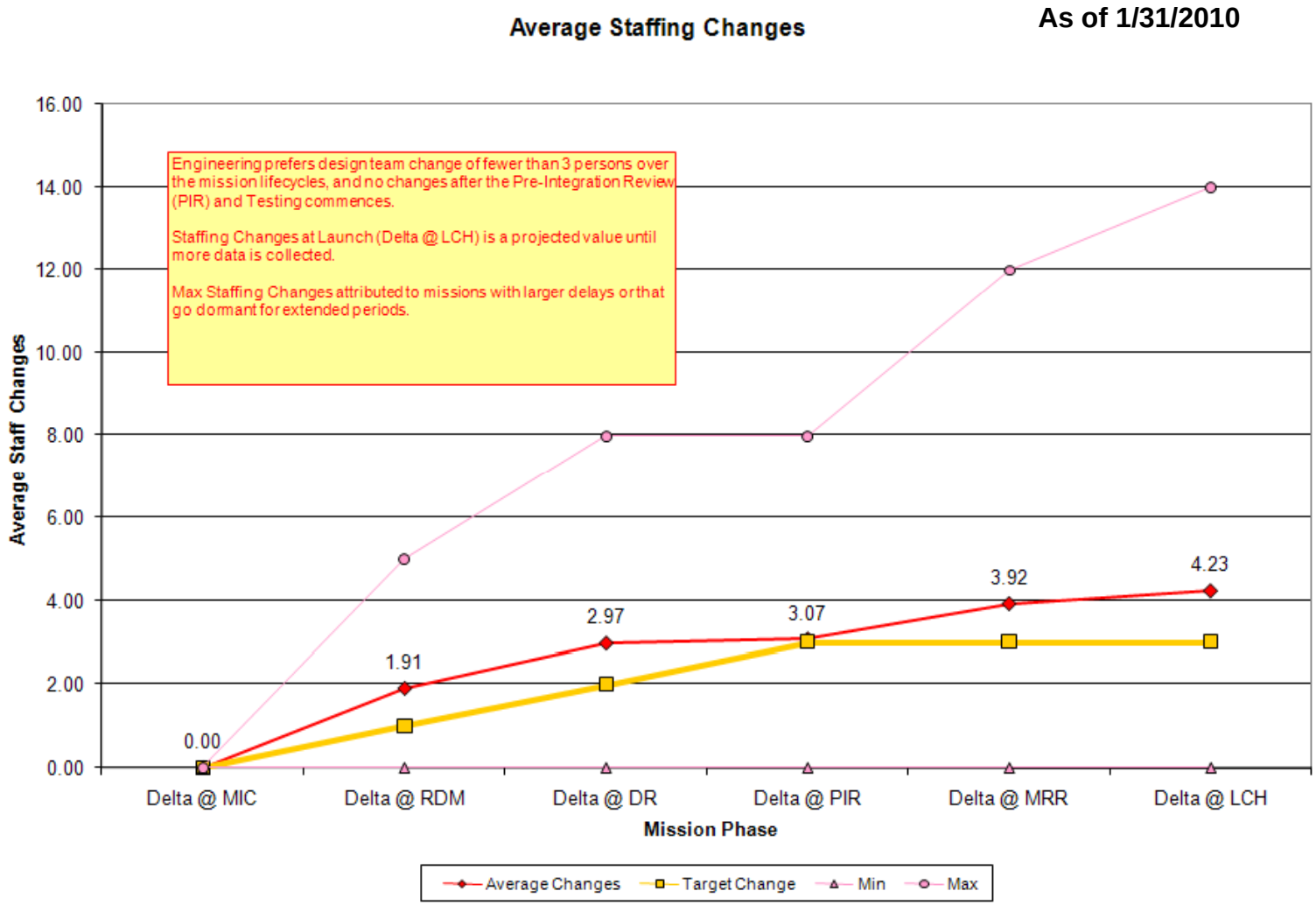

Risk Identification and Tracking

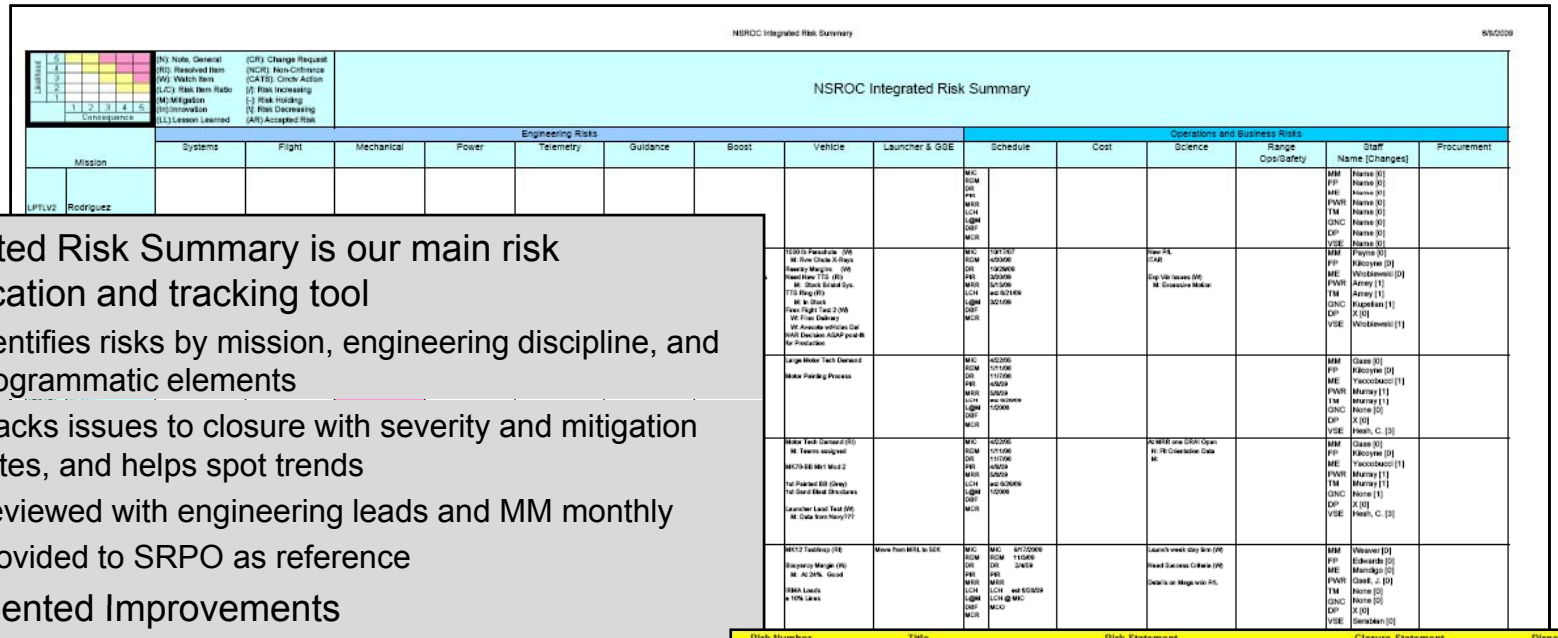

- Integrated Risk Summary is our main risk identification and tracking tool
  - Identifies risks by mission, engineering discipline, and programmatic elements
  - Tracks issues to closure with severity and mitigation notes, and helps spot trends
  - Reviewed with engineering leads and MM monthly
  - Provided to SRPO as reference
- Implemented Improvements
  - Revised color code to reflect NASA Risk Management Guidelines
  - Expanded legend of symbols
  - Defined in new ISO Process
- Maintained by new Systems Engineering Group
  - Plans include a migration to a MS Access version
  - Key tool in Lessons Learned feed-forward initiative
  - Meshes with SRPO "Residual Approved Risk Matrix"
  - More pro-active and "constructive" risk inquiries at technical reviews

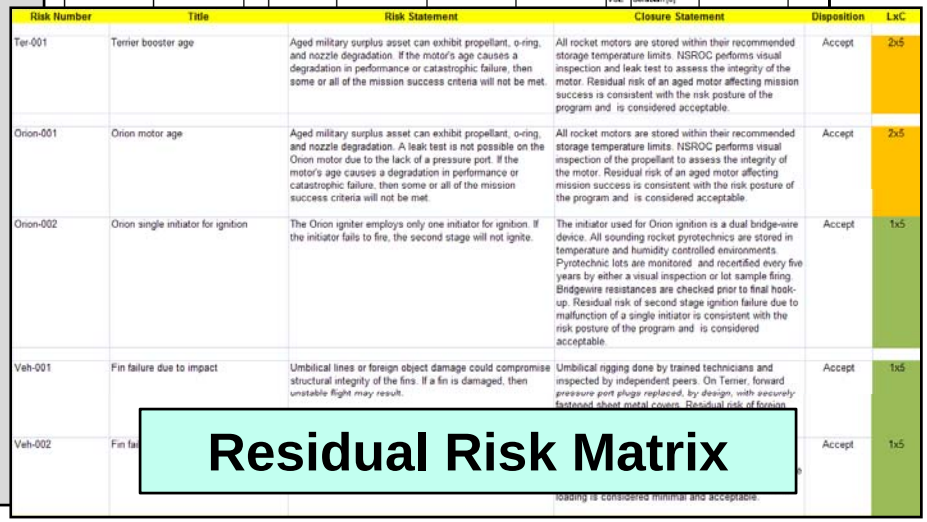

Risk Number	Title	Risk Statement	Closure Statement	Disposition	LxC
Ter-001	Terrier booster age	Aged military surplus asset can exhibit propellant, o-ring, and nozzle degradation. If the motor's age causes a degradation in performance or catastrophic failure, then some or all of the mission success criteria will not be met.	All rocket motors are stored within their recommended storage temperature limits. NSROC performs visual inspection and leak test to assess the integrity of the motor. Residual risk of an aged motor affecting mission success is consistent with the risk posture of the program and is considered acceptable.	Accept	2x5
Orion-001	Orion motor age	Aged military surplus asset can exhibit propellant, o-ring, and nozzle degradation. A leak test is not possible on the Orion motor due to the lack of a pressure port. If the motor's age causes a degradation in performance or catastrophic failure, then some or all of the mission success criteria will not be met.	All rocket motors are stored within their recommended storage temperature limits. NSROC performs visual inspection of the propellant to assess the integrity of the motor. Residual risk of an aged motor affecting mission success is consistent with the risk posture of the program and is considered acceptable.	Accept	2x5
Orion-002	Orion single initiator for ignition	The Orion igniter employs only one initiator for ignition. If the initiator fails to fire, the second stage will not ignite.	The initiator used for Orion ignition is a dual bridge-wire device. All sounding rocket pyrotechnics are stored in temperature and humidity controlled environments. Pyrotechnic lots are monitored and recertified every five years by either a visual inspection or lot sample firing. Bridgewire resistances are checked prior to final hook-up. Residual risk of second stage ignition failure due to malfunction of a single initiator is consistent with the risk posture of the program and is considered acceptable.	Accept	1x5
Veh-001	Fin failure due to impact	Umbilical lines or foreign object damage could compromise structural integrity of the fins. If a fin is damaged, then unstable flight may result.	Umbilical rigging done by trained technicians and inspected by independent peers. On Terrier, forward pressure port plugs replaced, by design, with securely fastened sheet metal covers. Residual risk of foreign	Accept	1x5
Veh-002	Fin fai		loading is considered minimal and acceptable.	Accept	1x5

Residual Risk Matrix

Configuration Control Matrix

- NSROC continues to populate the Configuration Control Matrix
  - Applies to all NSROC standard systems, processes, assets
  - Captures top level documents and cognizant engineer
  - Top level documents reference subordinate documents
  - Shared with SRPO as a reference
- CCB Panel meets once each month to update one engineering discipline
- CCB Matrix is now Adept controlled itself as EN75759
- CCB is the review authority for Level I and II Change Requests

- *February 2010 will see the start of monthly R&D Update meetings*

NSROC Engineering Configuration Control Matrix - Vehicle Systems Engineering (VSE)

Systems	Cog Eng	Alt Eng	Drawings	Schematics	Procedures	Reports	Other Ref's
Recovery							
ORSA 750	Serabian	Hesh			EE50149		ER96909 (Bristol),
ORSA 750 - w/ACS Pneumatics	Serabian	Hesh			EE50149		Process flow (WIP)
ORSA 750 - w/SPARCS mag	Serabian	Hesh		680-12611 (Bristol)	EE50149		Process flow (WIP)
ORSA 750 - Refurb Kit	Serabian						Bill of Materials
ORSA 1000	Serabian	Hesh			EE50149		Process flow (WIP)
ORSA 1000 - w/ACS Pneumatics	Serabian	Hesh			EE50149		Process flow (WIP)
ORSA 1000 - w/SPARCS mag	Serabian	Hesh		680-12611 (Bristol)	EE50149		Process flow (WIP)
ORSA 1000 - Refurb Kit	Serabian						Bill of Materials
ORSA 1250	Serabian	Hesh		680-12600 (Bristol)	ER94617 (Bristol)		Process flow (WIP)
ORSA 1250 - w/ACS Pneumatics	Serabian	Hesh			ER94617 (Bristol)		Process flow (WIP)
ORSA 1250 - w/SPARCS mag	Serabian	Hesh			ER94617 (Bristol)		Process flow (WIP)
ORSA 1250 - Refurb Kit	Serabian						Bill of Materials
Bristol 750 lb Alt Recovery	Serabian	Hesh			VS77631		ER93704 (Bristol), Process flow (WIP)
Bristol 1000 lb Alt Recovery	Serabian	Hesh			VS77631		Process flow (WIP)
Big IRMA Alt Recovery	Serabian	Hesh			30-33-1		Process flow (WIP)
IRMA 14" Alt Recovery	Serabian	Wroblewski			ME50371		30-33-2, Process flow (WIP)
Wallops 14" Alt Recovery	Serabian	Wroblewski					Process flow (WIP)
IRMA refurbishment process	Serabian	Wroblewski					Process flow (WIP)
ORSA refurbishment process	Serabian	Hesh					Process flow (WIP)
Parachutes							
PARANETICS 1000# CROSS CHUTE 2034-100	Serabian	Hesh			VS77249	Flores, Ariel. "Paraform Recovery System Design Analysis with 1,100 Pounds Total Weight."	Parachute Packing Records
PARANETICS, 63.5-FT CROSS CHUTE 2064-300	Serabian	Hesh			VS77249		
PARANETICS, 750# FLAT CIRCULAR CHUTE 2065-100	Serabian	Hesh			VS77249		
PARANETICS, 750# CROSS CHUTE 2093-300	Serabian	Hesh			VS77249	Alamat, Raken. "Design Analysis P/N 2093-300 Parachute Recovery System 750 lbs Black Brant Sounding Rocket." 1/6/1999	
PARANETICS, 1500# CROSS CHUTE 2093-200	Serabian	Hesh			VS77249		Parachute Packing Records
RAVEN, 1000# CROSS CHUTE C-52551	Serabian	Hesh	C52551 Rev D		VS77249	Siewert, Alan. Raven Report R-9403004-A. "Design Analysis Report for C-52551 Recovery System for 1000 Pound Payload." 3/11/1994	Parachute Packing Records
RAVEN, 750# FLAT CIRCULAR CHUTE C-52552	Serabian	Hesh			VS77249	Thies, Patrick. Raven Report R1269001. "Decelerator System 750 lb Capacity." 12/23/1989	Parachute Packing Records
RAVEN, 1250# CROSS CHUTE C-52674	Serabian	Hesh			VS77249		Parachute Packing Records
SANDIA, 24-FT FLAT CIRCULAR CHUTE (14" ORION LAND RECOVERY) MOD II-L	Serabian	Hesh			VS77249		Parachute Packing Records
SANDIA, 28-FT FLAT CIRCULAR CHUTE (14" ORION LAND RECOVERY) MOD II-750	Serabian	Hesh	Working New Production DWGs		VS77249		Parachute Packing Records
Parachute Procurement Process	Serabian	Hesh			VS77249		Statement of Work in progress
Ignition							
Bristol BB Ignition Housing	Burkhead	Wroblewski		680-03606 (Bristol)	ER96740 (Bristol)		VS77037 config definition sheet
NSROC BB Ignition Housing	Burkhead	Wroblewski	ME56900	See Electrical Sys.			Process flow (WIP)
NSROC BB ignition/Nihka Crossbar sep Assy	Burkhead	Wroblewski	ME51144	See Electrical Sys.			Process flow (WIP)
Bristol Taurus Ignition Housing	Burkhead	Wroblewski		600-04900 (Bristol)	ER96523 (Bristol)		Process flow (WIP)
NSROC Taurus Ignition Deck	Burkhead	Wroblewski	ME68952	See Electrical Sys.			Process flow (WIP)
Bristol Nihka Ignition Housing	Burkhead	Wroblewski			ER93685 (Bristol)		Process flow (WIP)
NSROC Nihka Ignition Housing	Burkhead	Wroblewski	ME68917 (Deck), or ME48954 (Deck)	See Electrical Sys.			Process flow (WIP)
NSROC Imp. Orion Ignition Housing	Burkhead	Wroblewski	ME44889	See Electrical Sys.			Process flow (WIP)
NSROC Lynx Ignition Housing	Burkhead	Wroblewski	Adept record 36696	See Electrical Sys.			Process flow (WIP)
Terrier Spin motor/clamp release Deck	Burkhead	Wroblewski	D35415	See Electrical Sys.			Process flow (WIP)
Talos Spin Motor Deck	Burkhead	Wroblewski	D32267	See Electrical Sys.			Process flow (WIP)
Improved Malmute	Burkhead	Wroblewski		See Electrical Sys.			Process flow (WIP)
NSROC Onole VSM	Burkhead	Bradley (EE)					
Thrust Termination							
Bristol TTS Kit	Burkhead	Wroblewski			VS46737		
Lynx FTS Assembly	Burkhead	Wroblewski	D43014, D43015				
Bristol Hybrid TTS (Under development)	Burkhead	Wroblewski		EE76346			
NSROC FTS (Under development)	Burkhead	Wroblewski					
Tailcans, Motor Adapters, and Interstages							
BB 4-fin Tailcan Assembly	Hesh	Owens					
BB 3-fin Tailcan Assembly	Hesh	Owens					
BB MoD/MoD1 Interstage	Hesh	Owens					
BB MoD/MoD3 Interstage fwd half	Hesh	Owens					
BB MoD/MoD3 Interstage aft half	Hesh	Owens					
Imp. Orion 4-fin Tailcan for single stage	Wroblewski	Owens	D24471 or ME54263				
Imp. Orion 3-fin Tailcan for single stage	Wroblewski	Owens					
Imp. Orion Drag Sep Tailcan Assy.	Wroblewski	Owens	ME44932				
Terrier Clamp Ring for IO drag sep.	Wroblewski	Owens	ME44964				
Imp. Orion Clamp Rel. Tailcan Assy.	Wroblewski	Owens	D36020				
Imp. Orion motor adapter for IRMA	Wroblewski	Owens	D31797				
Imp. Orion motor adapter for Wallops 14" AR	Wroblewski	Owens					
Lynx Drag Sep Tailcan Assy.	Wroblewski	Owens	D34411				
Terrier Clamp Ring for Lynx drag sep.	Wroblewski	Owens	D34663				
Talos/Taurus Interstage	Wroblewski	Owens	Adept record 30582				
Nihka Tailcan	Hesh	Owens					
Malemute Tailcan	Wroblewski	Owens					
Mesquito interstage	Owens	Wroblewski					
Improved Malemute Tail Can (Under development)	Wroblewski	Owens	ME71789				

Engineering Staffing and Retention

NSROC Engineering Staffing Plan

Site	Systems Engineering			Guidance			Flight Performance			Vehicle Systems			Electrical			Mechanical		
Wallops Flight Facility	Stanfield	NG	Eng	Jennings	NG	Eng	Edwards	NG	Eng	Hesh	NG	Eng	Williams	NG	Eng	Creighton	NG	Eng
	Blake	NG	Ad	Crippen	RSS	Ad	Onions	NG	Ad	-----	-----		Nock	SGT	Ad	Weidner	RSS	Ad
	Blaylock	NG	Eng	Kupelian	NG	Eng	Disbrow	ATK	Eng	Burkhead	NG	Eng	Diehl	NG	Eng	Mandigo	NG	Eng
	Ervin	NG	Eng	Ozanne	NG	Eng	Kilcoyne	NG	Eng	Owens	NG	Eng	Hesh	NG	Eng	Yacobucci	NG	Eng
	Jolley	ATK	Eng	Shoemaker	SGT	Eng	Power	NG	Eng	Wrobl' Nick	NG	Eng	Gsell	SGT	Eng	Adkins	NG	Eng
	Cruddace	NG	Eng	Benton	SGT	Eng	Melvin P/T	NG	Eng	Serabian	NG	Eng	Harclerode	NG	Eng	Thompson	NG	Eng
	Watkinson	NG	Ad	Gsell P/T	ATK	Eng	Guiliani	NG	Eng	Miller, D.	Hawk	Eng	Barnes	NG	Eng	Reese	NG	Eng
	Donovan	NG	Ad	Bowden, E	NG	Eng	FP for Edwa	Any		Herold	SGT	Tek	Malaby	SGT	Eng	Foster	NG	Eng
	Holmer	NG	Ad	Steele	ARC	Eng				Scott P/T	NG - SME		Bradley	NG	Eng	Wrobl', Nate	NG	Eng
	SE Contingc	Any		Lang	NG	Tek				PE for Hesh	NG		Johnson	SGT	Eng	Babcock	NG	Eng
				Scott, Mike	NG	Tek				Motor Sppt E	Non ATK		Banks	NG	Eng	Oberste	NG	Eng
				Corson	NG	Tek							Bowden, D.	NG	Eng	Rockwell	SGT	Eng
				Wilson	SGT	Tek							Amey	NG	Eng	Spaulding	ATK	Eng
				Snyder	NG	Tek							Gabbard	NG	Eng	Hylbert	NG	Drft
				Miller, C.	NG	Tek							Blake P/T	NG	Eng	Walthall	ARC	Drft
				Pneu Eng	Any								Lagman	NG	Eng	Paschak	ARC	Drft
				GNC for Jenn	Any								Ward	NG	Eng	Daughton	ARC	Drft
				Tek for McPl	Any								EE for Cranc	Any				
				Eng for Shoe	Any											**Environmental**		
				Sr. GNC	Any											Maxfield	NG	Mgr
				Jr. GNC	Any											-------	------	
																Marshall	NG	Tek
																Sharpe	NG	Tek
																Russell	NG	Tek
																Hudson	NG	Tek

Site	Systems Engineering			Guidance			Flight Performance			Vehicle Systems			Electrical			Mechanical		
WSMR				Martinez, C	NG	Eng				Christensen	ARC	Eng	Hoxworth	ARC	Eng			
				Grzelachows	NG	Ad				Evavold	NG	Eng	Bower	ARC	Tek			
				Martinez, J.	ARC	Eng				Evans	ARC	Tek	Rec'd TM Er	ARC				
				Harmon	ARC	Tek				Stephens	NG	Tek						
				Starr	ARC	Tek												
Totals	Engineers	5		Engineers	10		Engineers	6		Engineers	8		Engineers	17		Engineers	12	
	Non-Engineers		4	Non-Engineers		10	Non-Engineers		1	Non-Engineers		3	Non-Engineers		2	Non-Engineers		10

- NSROC continues to recruit for engineers and recover for sub-contractor transition
  - Lost 14 personnel (13 from OSC transition) and also created 14 new positions since June 2009
  - Replaced all 13 lost OSC personnel and filled several of the new positions
  - Exciting new engineering leadership: Williams (EE), Edwards (FP), Jennings (GNC), Hesh (VSE), Blaylock (SE)
  - Retain other seasoned engineering leaders: Creighton (ME), Martinez (WSMR)
- Average years of NSROC specific experience
  - GNC: 10 (-0) FP: 12 (-3) EE: 8 (-4) VSE: 8 (+1) ME: 2 (-1) SE: 3 (-5)
  - Lost employee and new employees pull this average down, though several of our new hires have many years of related work experience in other areas

Engineering Leadership Team

- NSROC Engineering Leadership Team changed at subcontractor transition
  - Mechanical Engineering – Brian Creighton
    - BS ME Clemson. Student on the Kane Sounding Rocket Mission
    - 6 years with NSROC Mechanical Engineering
  - Vehicle Systems – Catherine Hesh
    - BS Aero Virginia Tech. Engineering Intern NSROC
    - 4 years with NSROC Vehicle Systems
  - Electrical Engineering – Elton Williams
    - BS EE Virginia Tech. MBA Stafford University, London
    - Sounding Rockets in the 1980's. Automation for Ford Motor Company and risk management for BMPCOE
  - Flight Performance – Brent Edwards
    - BS Electrical Engineering Technology, University of Maryland Eastern Shore
    - 1 year NSROC MM, 10 years NSROC Flight Performance
  - Guidance Navigation and Control – David Jennings
    - BS EE University of Tennessee
    - NSROC Electrical Engineering and GNC Engineering
  - Systems Engineering – Don Blaylock
    - MS Astro, West Coast University, CA
    - USAF Air Force Weapons Lab, NGTS Wallops SCSC and RSC Albuquerque
  - Engineering Director – Ricky Stanfield
    - Ph.D. ME, The Catholic University of America, Washington DC
    - Physicist for US Army, NGTS Aegis BMD and NSROC as an ME, User-Development, Program Management
- This is a young Leadership Team, but battle-hardened, energetic, enthusiastic, and dedicated. We have great confidence in their abilities

Mechanical Engineering

Brian Creighton

Mechanical Engineering

- Blow-off/Slammer Door Design *(updated)*
  - Modified latching mechanism
  - Modified pyro block to avoid binding issue
  - Captured high speed video during successful deployment test in December 2009
  - To be flown on 36.265/Bock & 41.087/Heyne

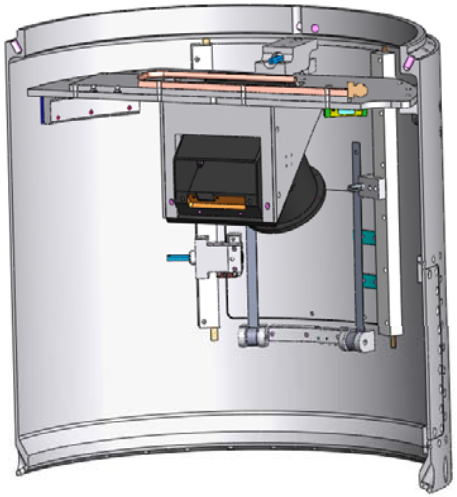

- Launcher Egress Analysis *(updated)*
  - Performed analysis for Airborne Laser (MARTI) missions
  - Allowed a QE as low as 68 degrees
  - Two successful flights that matched model data well
  - Aid in better evaluating missions that desire both a high and low flying vehicle in the air simultaneously (i.e. TRICE missions)

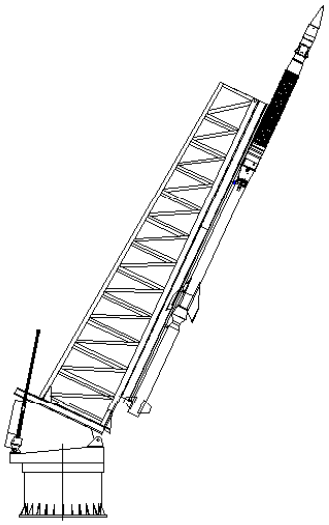

Mechanical Engineering

- 41.084/Conde TMA Ampoule Ejection Design
  - Modular design for deploying TMA ampoules outward radially from the mother payload
  - Spring loaded and rocket propelled versions
  - Miniature electronics section on ampoule
  - One event deploys 2 doors which exposes 8 ampoules (redundant and minimizes the use of pyros)
  - Rocket propelled ampoules are released upon ignition

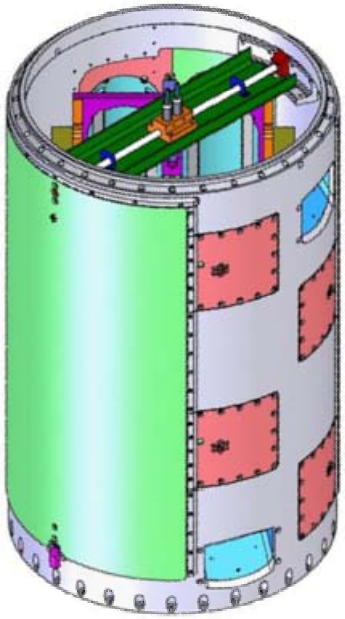

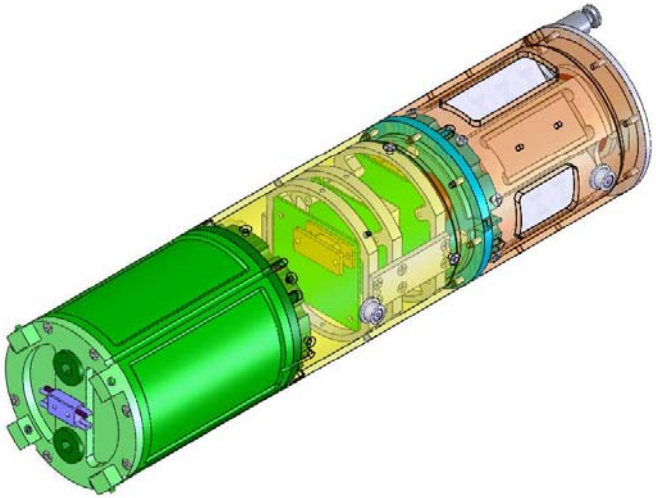

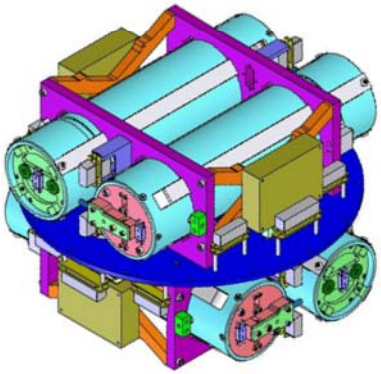

T&E Lab

- Unholtz-Dickie 6,000 lbf Vibe System
  - Replaced Ling 395/DMA5 system
  - More efficient amplifier
  - 2” stroke shaker
  - Improved component shock capabilities

- Data Physics Vibration Amplifier
  - 330 KVA amplifier supports existing shakers
  - Replaced oldest vibe amplifier (72 KVA)
  - Allows for shaker upgrades (up to 40,000 lbf)
  - Air cooling system, no longer dependent on chilled water for cooling

Machine Shop

- HAAS Milling Center
  - Assist with backlog of mill work
  - 30 HP, 10k RPM drive
  - Work space is 120’ x 40’ x 28”
  - Capable of complex parts via it’s interface with MasterCAM

- Clausing Manual Knee Mill
  - Off loads the larger mills so they can focus on larger parts
  - Perfect machine for quick turn-around parts needed during T&E

Vehicle Engineering

Catherine Hesh

Flight Termination System

System	Status	Changes	Components to be Qualified
Legacy	No systems left	None	None
Hybrid I	6 systems left First flight was 36.252 Cash in November 2009	Receiver, Circuit Card Assembly (CCA)	Receiver, CCA, cables
Hybrid II	First flight in early 2011	Fully redundant, adds NSROC circuitry, repackaged Black Brant CDI circuitry	Antenna system, FTS controller, battery, Black Brant ignition system , ordnance paddles
Final	Targeting first flight in 2012	New ordnance package	S&A, FCDC

HFTR60 Receiver

Nickel Metal Hydride Battery

- 2010 efforts will focus on qualifying FTS components for Hybrid II including the antenna, FTS controller, new battery, and the repackaged Black Brant ignition system.
- Design Review will be held in February 2010
- Component qualification is expected to be complete in mid 2010
- System level testing is expected to be completed in mid to late 2010.
- New ordnance kits are expected to be delivered in late 2010.

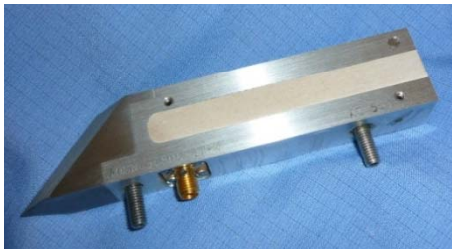

FTS Quadraloop Antenna

Black Brant IX Ignition System Repackaging

- System designed for Black Brant IX flights launching from White Sands which require a flight termination system.
- Goal is to repackage the ignition circuitry in a single 4.5”x5.5”x2” box to allow the igniter housing dimensions and weight to remain the same as the current systems while accommodating the redundant FTS components. Each igniter housing will fly 2 of these boxes for redundancy.
- Design review is scheduled for February/March 2010 and prototype units will be built in March 2010.
- Qualification will be completed in 2010 and ready for the first flight of Hybrid II in early 2011.

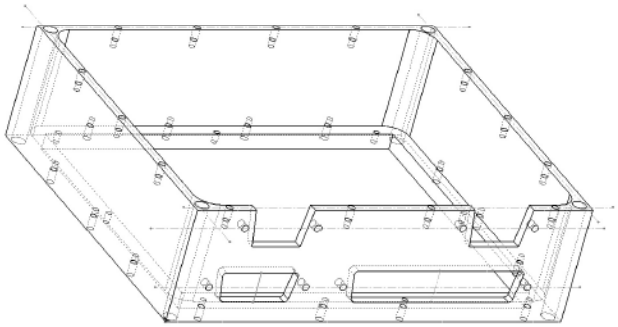

Motor Contracts

- Existing Black Brant Contract Status
  - 2 open contracts – 18 motor buy and 15 motor buy
  - All 18 motors cast and delivered for 18 motor buy, awaiting final fin delivery
  - 6 of 15 motors cast for 15 motor buy
  - Motor deliveries are expected to be complete in June 2010

- Existing Nihka Contract Status
  - 1 open contract – 9 motor buy
  - Nihka pre-production review held in early February
  - Motor deliveries are expected to be complete by April 2010

- New Sustainer Motor Procurement
  - Competitive motor procurement for a Black Brant class vehicle conducted in 2009
  - Contract awarded to Bristol in October 2009 for 12 Black Brant Mk1 rocket motors
  - Motor delivery will begin in July 2010 and will be complete in March 2011
  - Black Brant Mk1 motors delivered will use a new motor case material

Nihka Redesign

- New Redesigned Nihka Motors
  - Held a Non-Advocate Review to evaluate the proposed changes
  - New insulation design and modified igniter charge composition
  - Performed propellant ignitability testing at China Lake, results fell in line with old Nihka propellant
  - Igniter testing is complete
  - Static fire conducted at Bristol's facility in November 2009
  - Deliveries begin in early 2010

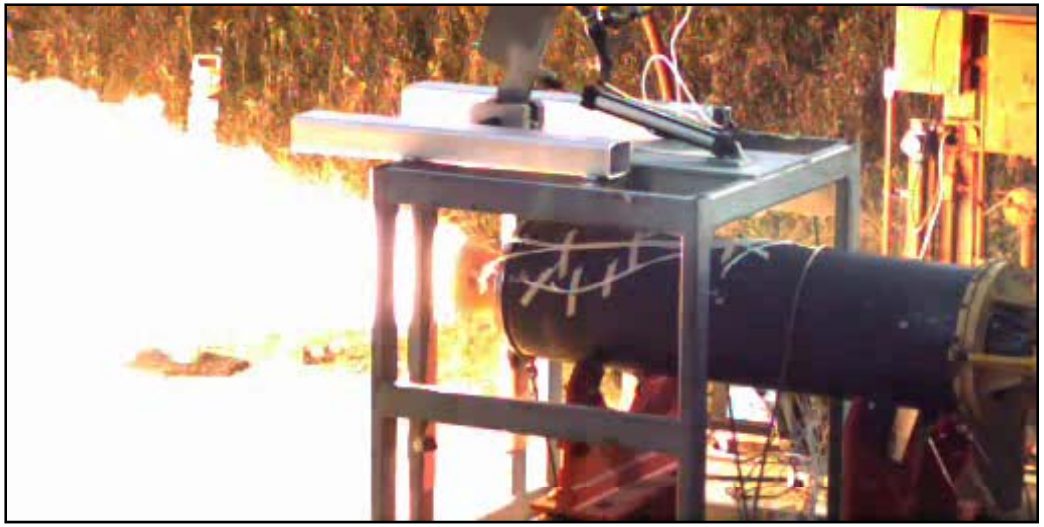

Nihka Static Fire – November 2009

Improved Malemute

- Improved Malemute Vehicle Development
  - Static fire conducted in July 2009
    - First instrumented static fire on Wallops Island in recent history
    - Designed and built a test stand
    - Fired motor with flight CDI/AFD system
    - Fired at reduced pressure to test igniter high altitude capability
  - Flight Test
    - Instrument with pressure transducer, strain gauges, thermistors, accelerometers, vibrometers, and aft-looking cameras
    - Flight test vehicle will be a Terrier Mk 70 – Improved Malemute
    - Test flight scheduled for late February 2010
  - Terrier – Improved Malemute out performs a single stage Black Brant

Improved Malemute Static Fire

Recovery Systems

- New ORSA Avionics Development
  - New system includes electronic timers, g-switch, and a circuit consistent with other NSROC systems
  - Component level qualification testing completed by February 2010
  - System level testing expected in early 2010
  - Design review expected in March 2010
  - Test flight of deck in mid to late 2010 and first operational flight in 2011
- Parachute Procurement
  - RFP for 14” 750# parachute systems will be released in mid 2010
  - Parachutes to be procured by early 2011

Capacity	Existing	Exhaustion Date
325#, 14”	4	TBD
750#, 14”	3	Through 2010
750#, 17” Kevlar	9	TBD
750#, 17” Standard	8	Through 2013
1000#, 17”	23	Through 2011
1250#, 17”	10	Through 2010

G-Switch

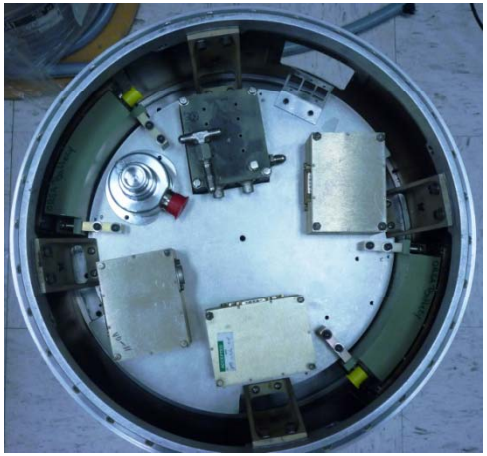

G-Switch Installed in ORSA

Electrical Engineering

Elton Williams

Continuous Improvements

- Update from Previous SRWG Meeting
  - 20 Mbps s-Band Telemetry
  - 150 Mbps X-Band Telemetry
  - Next Generation GPS

- New Technology Innovations
  - Aft Looking Video Instrumentation Section
  - TMoIP Implementation and Development

20 Megabit Per Second (Mbps) PCM

- PSL developed the “MV” PCM encoder about 8 years ago and has used it on several of their non-NSROC efforts. It has a 3” x 2” footprint and presently has 4 modules that can support data rates up to 20 Mbps
  - Control deck with single RS232 input deck
  - Strain gauge / bridge completion deck
  - 4 Channel programmable input voltage range analog deck
  - 8 Channel 0 – 5 Volt input voltage range analog deck
- NSROC has submitted requirements for PSL’s development of the following data modules
  - 32 Channel 0-5 Volt input voltage range analog deck
  - 12 Channel thermocouple deck
  - 4 Channel asynchronous deck
  - 2 Channel time event / buffer deck
- PSL is in the process of enhancing existing 16 bit parallel digital deck to work at bit rates up to 20 Mbps (Planned for use on Figueroa / 36.245)

20 Mbps Data Issues & Resolutions

- 2-20 Mbps PCM/FM RF links completely fill allowable 90 MHz bandwidth allotment
- WSMR launches are limited to 20 MHz RF Bandwidth
- 20 Mbps PCM/FM spectrum extends to 23.2 MHz
- PSL MV PCM encoders will not have enough data channels to support down linking of ACS, S-19, vehicle and TM housekeeping data. Anticipate MV encoder being used just for Experiment data.
- If 2-20 Mbps PCM/FM RF links are used a third housekeeping data downlink will be required which will require using upper S-Band.
- Upper S-Band is currently approved at WSMR 2370 MHz.
- NSROC has 6 receivers capable of supporting 20 Mbps and or Upper S-Band.
- No backup TM tracking antenna for 20 Mbps data rates (Redstone is only viable antenna) unless RF transmitter power is doubled to 20 Watts

150 Mbps Data Downlink

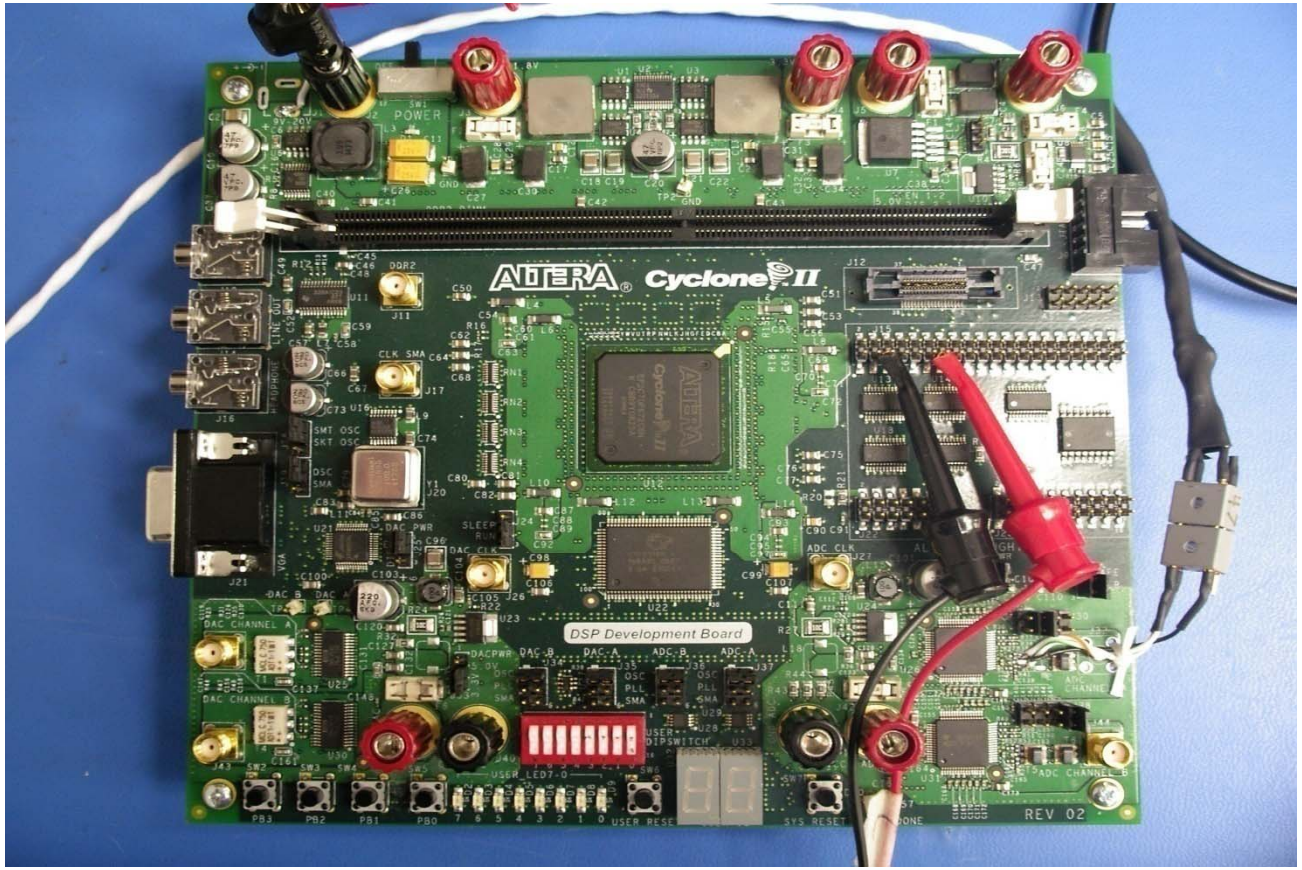

150 Mbps PCM System Status

Completed:

- Altera Cyclone II EP2C70 DSP development board ordered and delivered.
- Development board was programmed and tested to output 16 bits per word digitized data at 2 M, 10 M and 150 Mbps
- Analog input single ended to differential buffering circuit development work completed
- CCSDS formatting implementation completed (recommended by NASA WFF AETD)
- Successfully implemented design to generate µS Time Stamp from GPS signal to time tag PCM frames
- NSROC developed capability to decommutate and convert analog digitized data in 150 Mbps stream back to analog signal using additional capability of Altera Cyclone II DSP development board
- RT Logic High Rate Dual Channel X-Band Downlink Processing System Captures Data. Extract S/W developed in house
- LVDS receivers and drivers have been ordered and received but need to be installed on airborne and ground DSP development boards
- GSE case has been ordered and received. Additional DSP development board will need to be packaged, wired and checked out for GSE

Next Generation GPS

GPS Receiver Status

- Javad model JNS100 was chosen as a candidate for Next Generation GPS receiver.
- First JNS100 receiver and associated interface circuitry was successfully flown on 41.075 Smith Sub-TEC II
- Second JNS100 receiver assembly successfully flew on 40.023 Lynch mission
- NSROC has 12 JNS100 receivers ready for assembly
- NSROC has completed evaluation of a Javad TR-G2 miniature GPS receiver.
- The TR-G2 receiver is less than 50% of the size of the JNS100 unit.
- The TR-G2 receiver has some additional flexibility in operation programmability
- NSROC has ordered 10 of the new TR-G2 and flew one as a mission of opportunity on 39.009 Bernhardt in September 2009

Aft-Looking Video Instrumentation System (ALVIS)

- Motor plume diagnostic video system
  - Monitor plume for signs of misalignment or eccentricity
  - 2 and 4 camera arrangements
- Two modes of data collection
  - On-board DVR for recoverable missions
  - Telemetry for non-recovered missions
- System Objectives
  - Low profile camera with 360 degree view around motors
  - Self contained power, recording or telemetry
- Considering options for data review
  - Presentation for human analyst
  - Image processing for comparative analysis

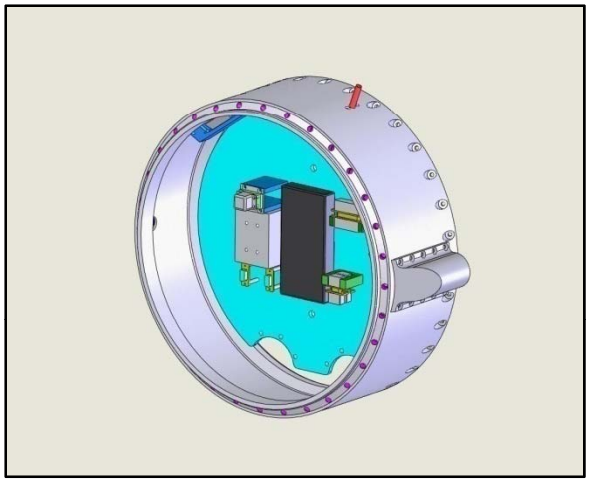

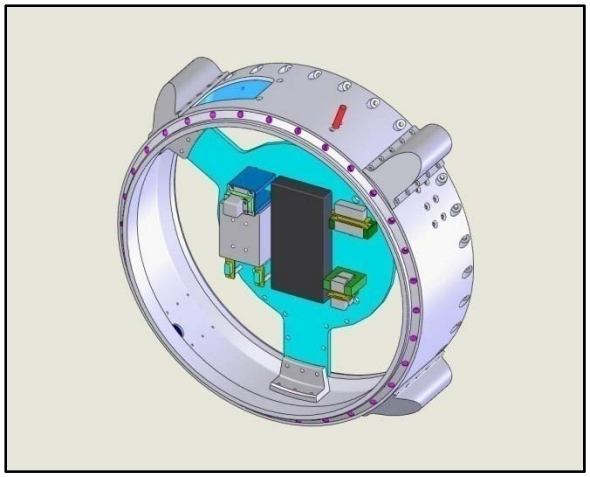

Aft Looking Video Instrumentation System

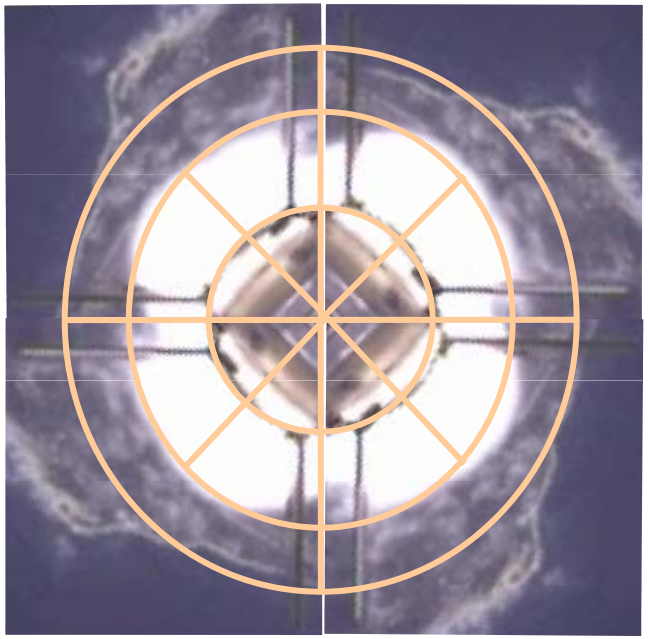

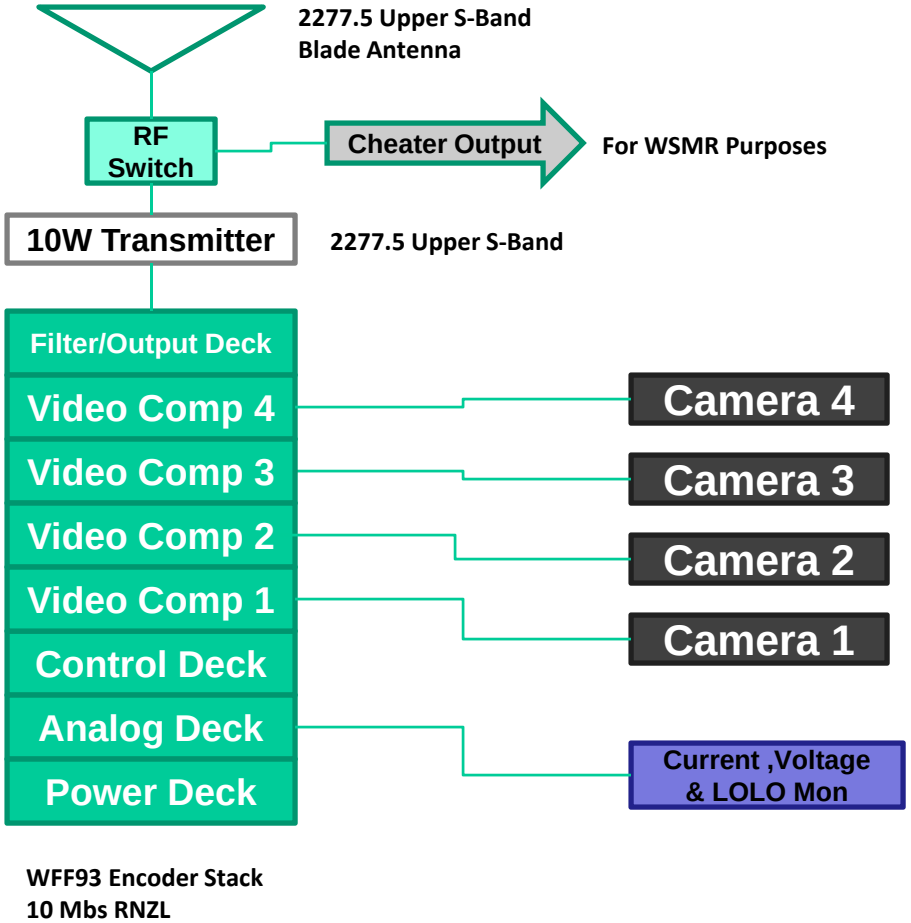

Telemetry Over IP (TMoIP)

- Telemetry over Internet Provider/Processor (TMoIP) is a way to transmit one or more telemetry data streams from a payload to a standard computer network

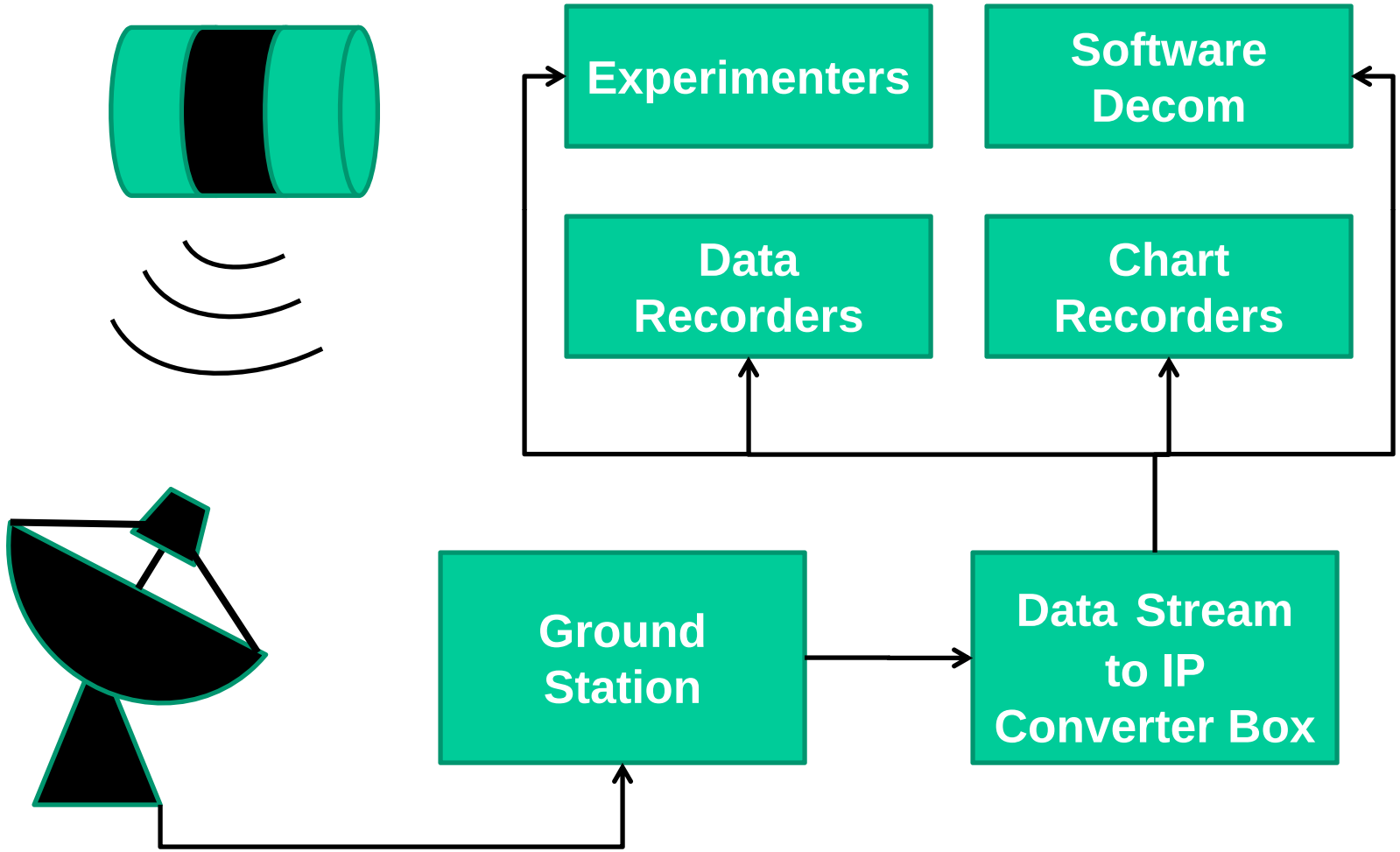

TM over IP

- TMoIP has an easy interface for experimenters to manage their data
- Based on a standard IP network, that most everyone understands
- TMoIP is a huge cost benefit potential
  - There would no longer be the need for NSROC or the experimenters to purchase expensive hardware
  - A software Decom is all that is needed
- Software decoms can easily be written and manipulated by any software developer that understands network programming
- TMoIP would require less equipment in the field
  - A laptop could potentially do the same that our current TDPs and chart recorders and data recorders do now
- Bit Rates can be achieved as fast as your network and Decom software will support depending on ethernet bandwidth and number of users

Flight Performance and Data Analysis

Brent Edwards

Flight Performance Programs

- FP Programs
  - Continually strive to improve programs and their abilities
  - Mix of FORTRAN, C++, MATLAB programs
  - GUI's created to increase efficiency and reduce input errors
  - FORTRAN and C++ programs are Configuration Controlled, MATLAB programs are in progress
  - Manuals and procedures established for Preflight, Post-flight, Wind Weighting
  - RDM, DR, MRR, and Post-flight templates controlled in Adept
  - Maintain archive of flown missions and supporting analysis
- Wind Weighting
  - All FP Engineers fully trained in WW operations
  - WW conducted remotely or on site as required

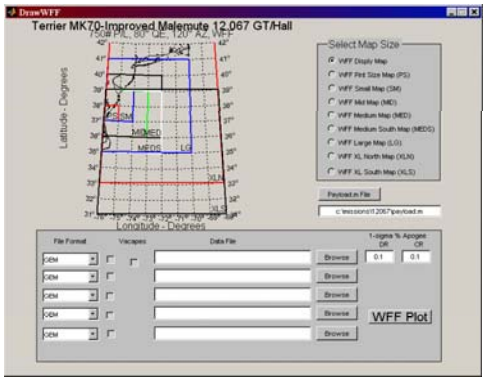

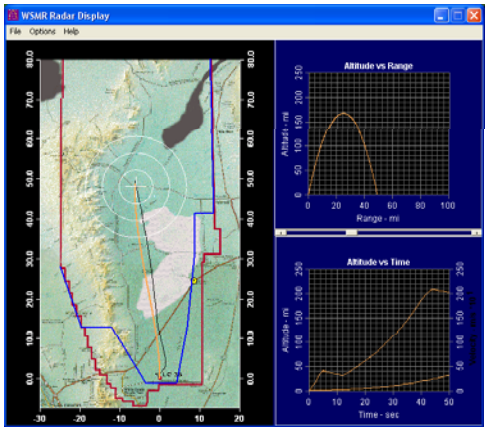

Vehicle Development & Meetings

- Vehicle Development
  - Terrier mk70-Improved Malemute
  - Continued development for Mesquito
  - Terrier mk70 as Taurus 2nd stage replacement
  - Oriole implementation as 3rd stage
  - Zero spin rate BBIX
  - Nihka ignition on down leg
- Internal FP/DP Meetings
  - Review of new/modified production code
  - Share analytical status and techniques
  - Discuss program/analytical improvements

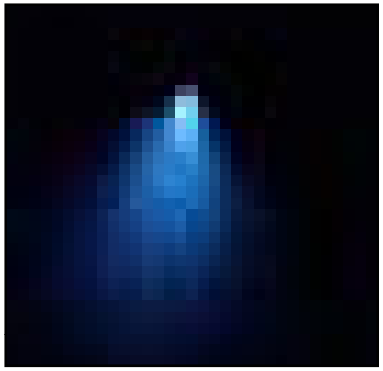

Data Products

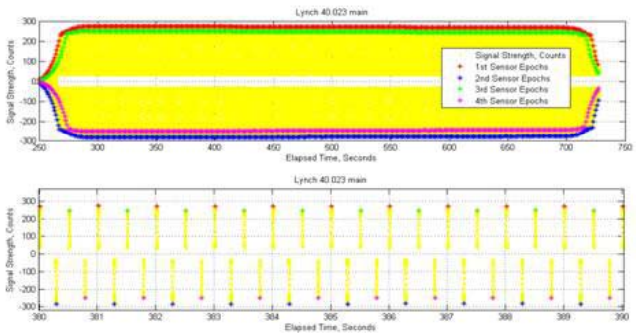

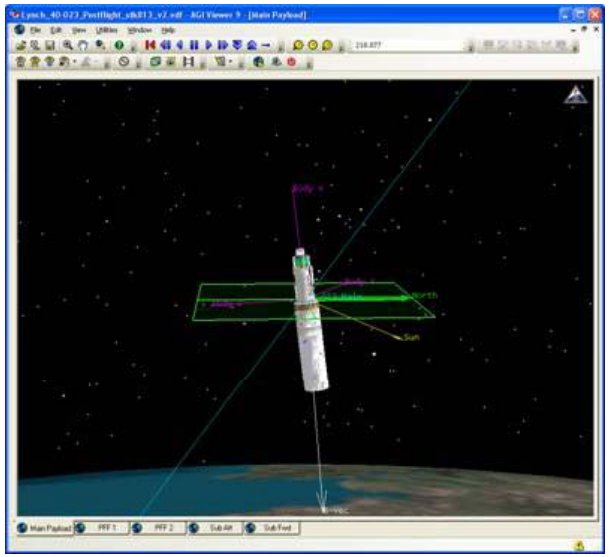

- Attitude Determination
  - Updating attitude reduction manual
  - Updating and Documenting attitude reduction programs
  - Created method that allows more precise synchronization of telemetry data between multiple payloads and PCM stacks resulting in a post-flight UTC time accuracy of microseconds
  - Troy 7 is continuing to provide attitude analysis support for campaigns and complex payloads
  - Working with Mission Planning Lab (MPL) to create flight data visualizations using Satellite Tool Kit (STK)

Guidance Navigation and Control

David Jennings

Carlos Martinez

Attitude Control System Status

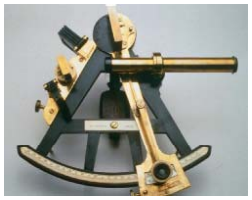

- Attitude Control System Developments
  - NIACS
  - NMACS
  - Celestial ACS
  - Boost Guidance
  - SPARCS

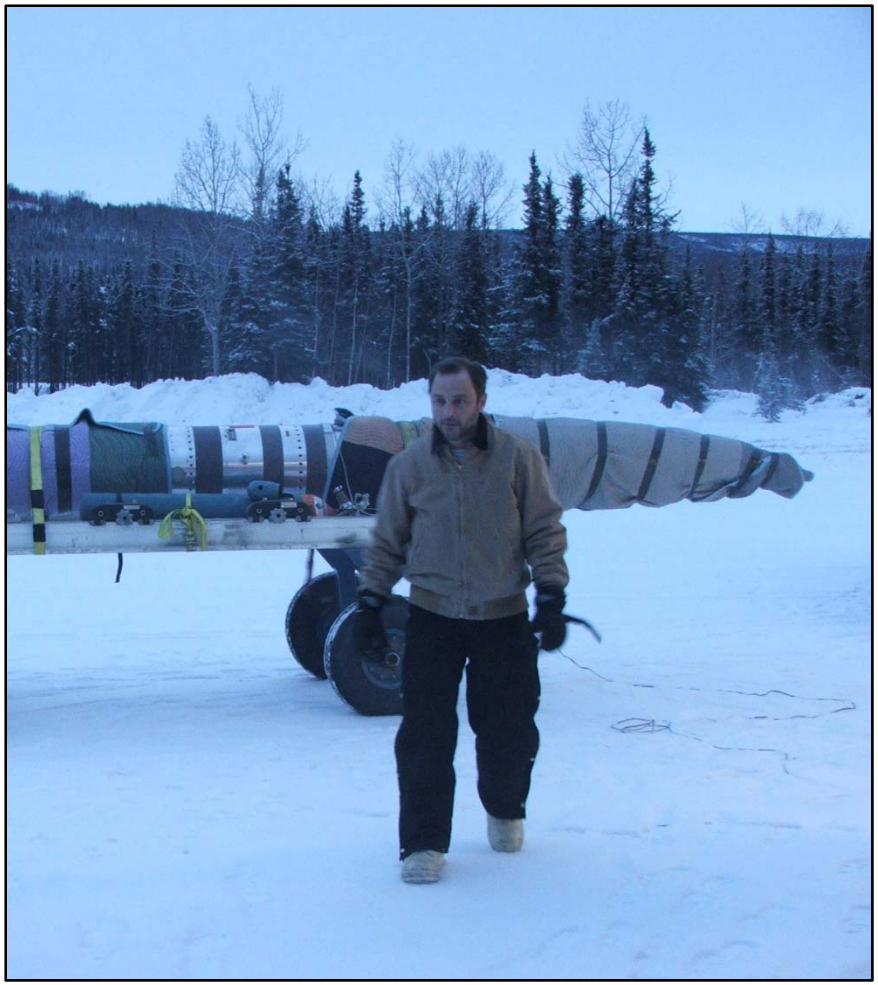

NSROC Inertial ACS (NIACS)

- NIACS
  - Inertial pointing capability
  - Roll rates from 0 to 4 Hz
- GLNMAC
  - Contains LN-200 Fiber Optic Gyro (FOG)
  - Accuracy to 1 degree in Pitch, Yaw, and Row
- Option for a Digital Magnetometer
  - HRM2300 by Honeywell
  - 41.068/Seybold tested this approach
- Option for GPS Solutions
  - Velocity Vector and Angle of Attack Missions
- Working on new Navigation Solution
  - Get velocity, altitude, trajectory, and angle to local horizon
  - For scramjet HiFIRE II to ignite upper stage
- Working on rate damping controller
  - For 41.087/Heyne mission
  - To control camera scan at certain constant rate rather than at constant acceleration

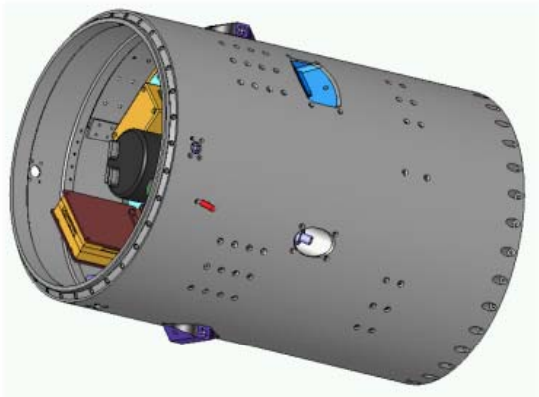

NSROC Magnetic ACS (NMACS)

- NMACS
  - Magnetic pointing capability
  - Roll rates from 0.25 to 5 Hz
- Magnetometers
  - NMACS Bartington (± 10V)
- Rate Sensor
  - QRS11 Gyro chip sensor
    - Considered upgrade to QRS116
    - More expensive
    - Now considering $2500 MEMsense Micro IMU (replace Syston Donner rate sensors ($15000 and Bartington Mag $5500)
    - 3 axis rate, magnetometer, accelerometers
    - Test Flight on 40.025/LaBelle
    - More shock resistant than Rate Sensor
- Auxiliary Sensors
  - Horizon Crossing Indicators
  - Roll indication in <0.5 degree in post processing
- RTAS in real-time for this 3 axis solution within 3 degrees all axis

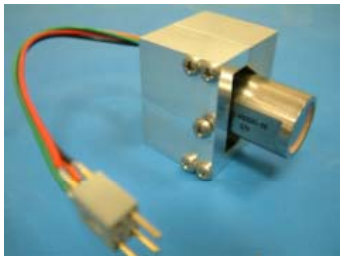

NMACS

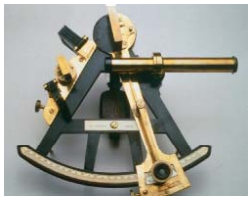

- SPARCS/NMACS new Printed Circuit Board
  - A new signal condition board for buffering of all signals from the ACS to TM
  - Isolates noise to the ACS microcontroller
  - Lower noise in ADC measurements improves pointing stability
  - 10 new boards have been built and 4 have flown successfully

- NMACS New Rail Test Mode
  - Rail test mode was added to allow for firing valves each night of the windows
  - Preclude the valves from sticking after sitting under pressure for extended periods
  - New valves are currently in the late stages manufacturing at Preece
    - New valves will have a new cylinder bore,
    - Different o-rings, and
    - New poppet seals to conform to our new testing procedures
  - New testing procedure
    - All new Preece valves will undergo extended periods of pressurization prior to actuation

Celestial ACS (CACS)

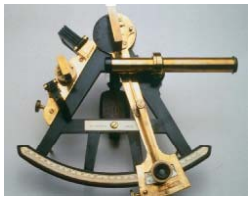

- CACS
  - Fine pointing <0.5 arc sec
- Fiber Optic Gyro
  - Uses GLNMAC and the LN-251 IMU from NGES
- Star Tracker
  - ST5000 by University of Wisconsin
  - Flathead and cylindrical sensor heads support different looking requirements
- ST5000 Mk III
  - Future repackaging eliminating Ball circuitry
  - Smaller, lighter, and more robust
  - Recent improvements in Lost-In-Space (LIS) solution time by reducing star catalog to just the visible star field (not the stars obscured by the Earth
- Planetary target (Venus) for 36.261/Clarke
  - Test ST5000 ability to track while rejecting bright asymmetric planet during flight
  - Not controlling to the planet, will be using adjacent star field, but may elect to guide to planet if testing goes well

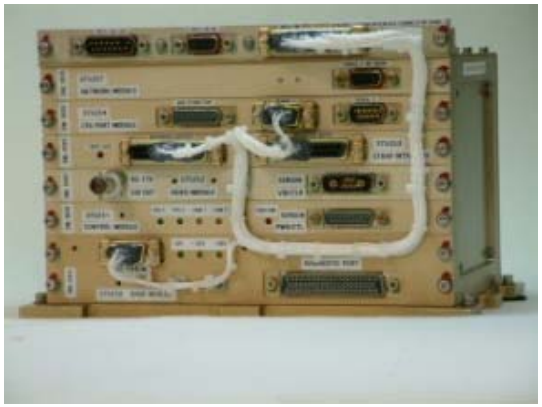

S-19 Series Boost Guidance

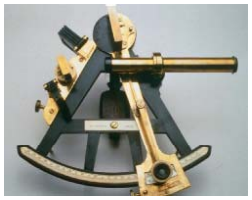

S-19L

- S-19 Boost Guidance System
  - Supported now by RUAG (formerly Saab)
  - Two versions now in service
  - S-19L is the newest version
    - Uses the LN-200 IMU
    - Four units currently available
  - S-19D is the previous version
    - Uses the DMARS Platform
    - Three units currently available
  - Electrical differences are minimal and have been accounted for in TM interfaces
  - S-19D will be retrofitted to become S-19L's when they are flown this Spring

SPARCS VII

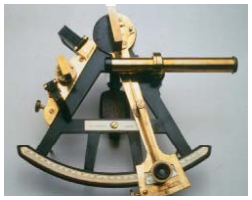

SPARCS VII Mechanical Rate Gyro Replacement Evaluation

- **Systron Donner (SDI) QRS116**
  - Solid state rate sensor with improvements in noise and vibration specifications over the SDI QRS11
  - QRS11 currently used in the NMACS
  - Output signal has a bias that has to be removed in software
  - The sensor output requires low pass filtering
  - High cost
  - A QRS116 triad was tested in the air-bearing vehicle successfully
- **Watson Industries ARS-M322**
  - Solid state sensor
  - All required electronics inside gyro housing; including power DC-DC and filtering
  - Lower cost than the QRS116
  - large mechanical dimensions
  - Gyro test results in rate table acceptable; Air-bearing testing pending

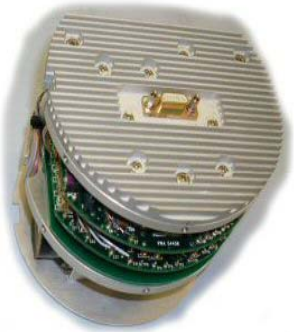

SPARCS VII

- SPARCS new Printed Circuit Board (PCB)
  - A new PCB was designed with better grounding planes to reduce noise in the Analog to Digital Converters (ADC) measurements
  - ADC input low pass filter improved
  - Lower noise in ADC measurements improves pointing stability
  - In addition the new PCB incorporates Flash Memory to the SPARCS controller board making it easier to program
  - 5 new controller boards have been built and are under testing

Upgrade to SPARCS Pneumatics

- Complete Pneumatics System
  - All up assembly 16 inches overall length
  - Flexible configurations
  - Stock components
  - Proven hardware
  - Low cost
- Replacement of 880 cu-in Brunswick tanks
  - 880 cu-in tank requires high re-tooling costs
- Use stock NSROC hardware including SCI 200 cu-in tanks
- Flexible to meet payload specific gas requirements
- Adaptable to “hi flow” dual regulator configuration
- Adapts to proven SPARCS components
- ACS interchangeability
- Ease of component testing on air bearing

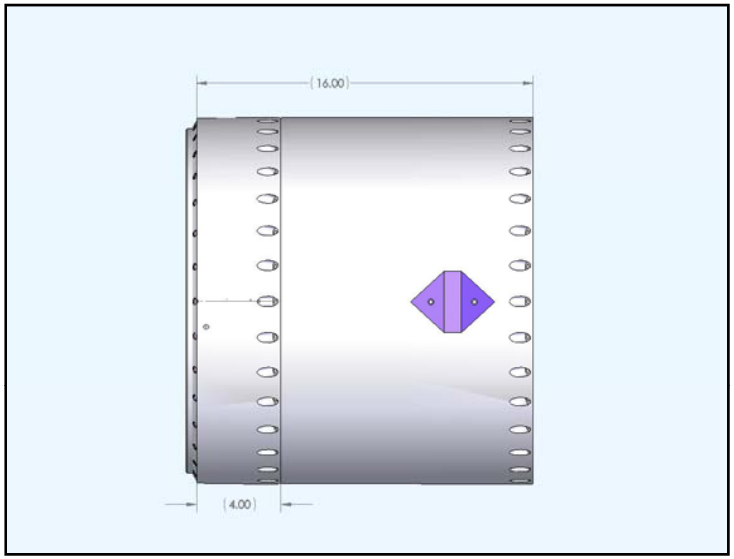

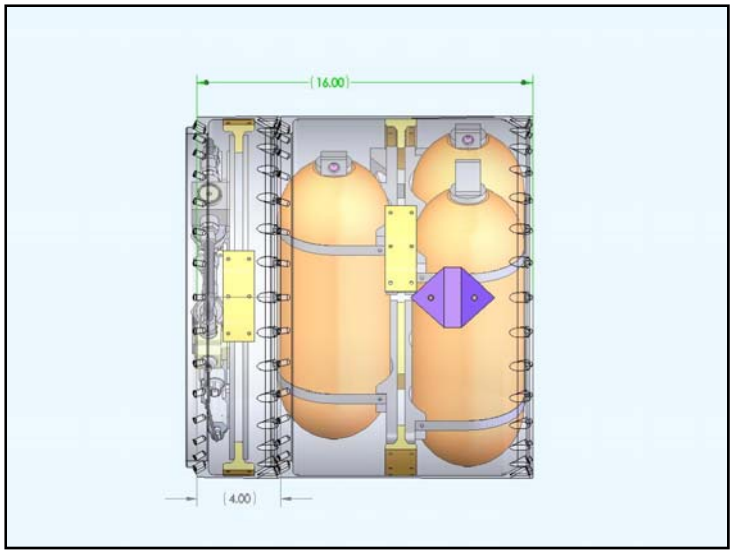

Upgrade to SPARCS Pneumatics

- Components
  - Regulators
  - Transfer Valves
  - Pressure Transducer
  - Low Pressure Check Valve
  - In-Line Filters
  - Manifold

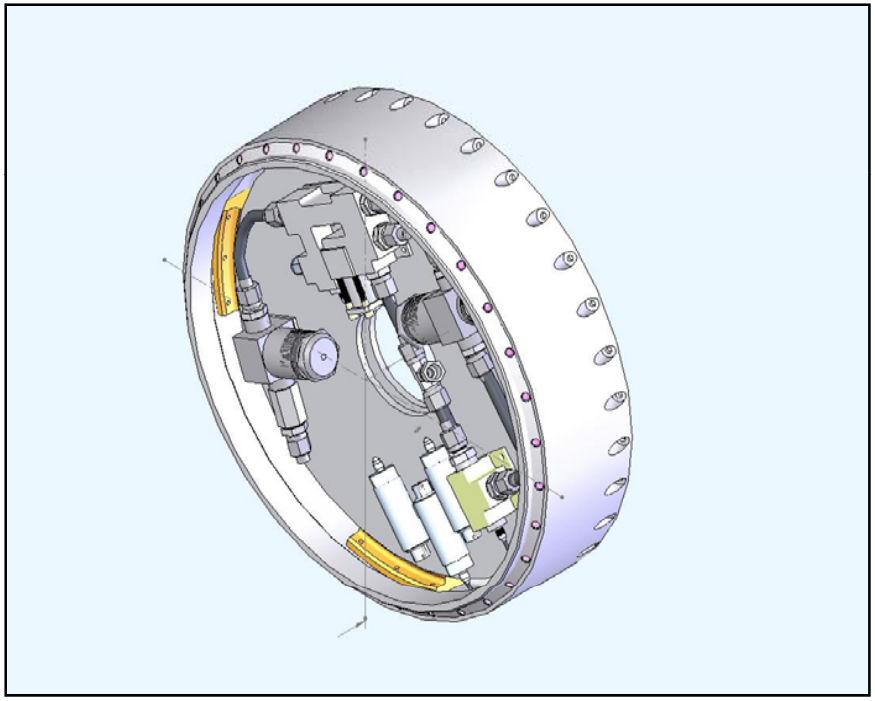

Upgrade to SPARCS Pneumatics

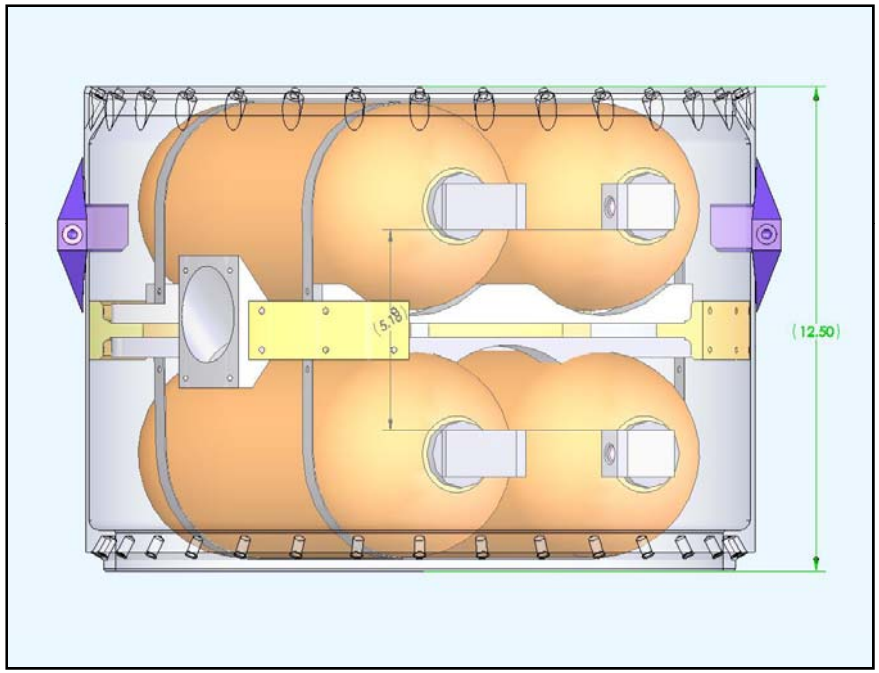

Four tank 800 cubic inch module

Three tank 600 cubic inch module

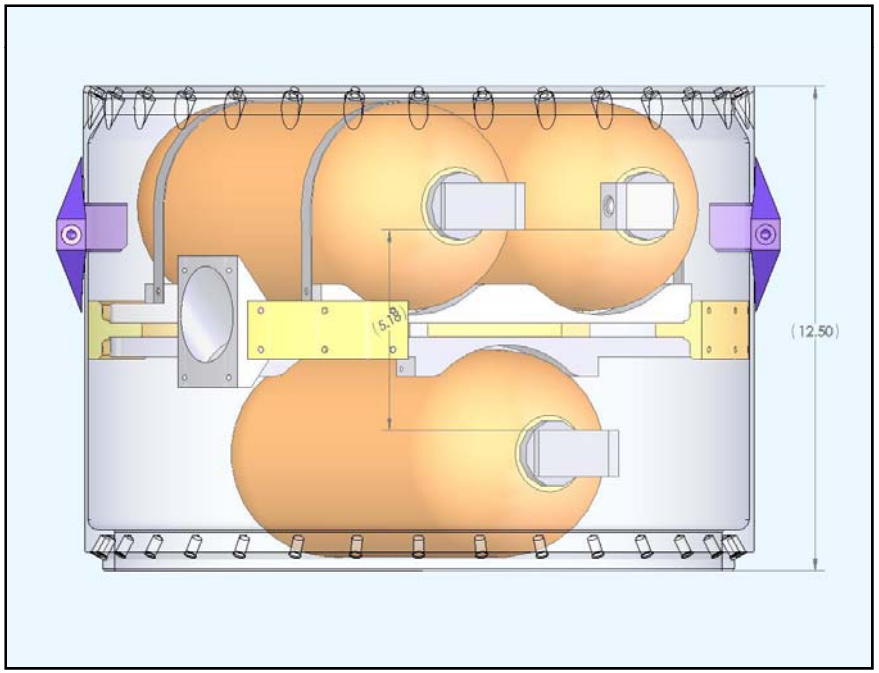

Uplink Command System Room

- **Improvements in the layout and installation of the UCG in the ASCL room**
  - LCD screens mounted on the wall providing more space for experimenters
  - UCG Computers in an enclosure with improved temperature control
  - Improved power system with UPS for both systems

Uplink Command Generator in a Laptop Computer

- Implementation of the Uplink Command Generator in a small Laptop Computer
- Full Functionality
  - Video Display for ACS man-in-the-loop pointing adjustments
  - CMD and Command Echo feedback via USB to RS232 Converter
  - Auxiliary commands included
  - Portable system
  - Implementation was originally requested by the EDSR team for testing purposes

NSROC Systems Engineering

Donald Blaylock

Systems Engineering

- Integrated Risk Management
  - Integrated Risk Summary
  - SRPO Residual Approved Rick process
- Configuration and Change Management
  - Design Baselines and Change Request process control
  - Configuration Control Board (CCB) Actions
- Systems Engineering
  - Pool Resource – Support Design Team is systems interaction and continuity
  - Audit – Engineering Notebooks, Test Operations, System Level Decisions
  - Project Mgmt – Non mission-specific efforts as necessary
- Peer Review and Action
  - Chairmanship and Memorandums for DR and MRR
  - Mission Close-out Reports
  - Lessons Learned management and feed-forward

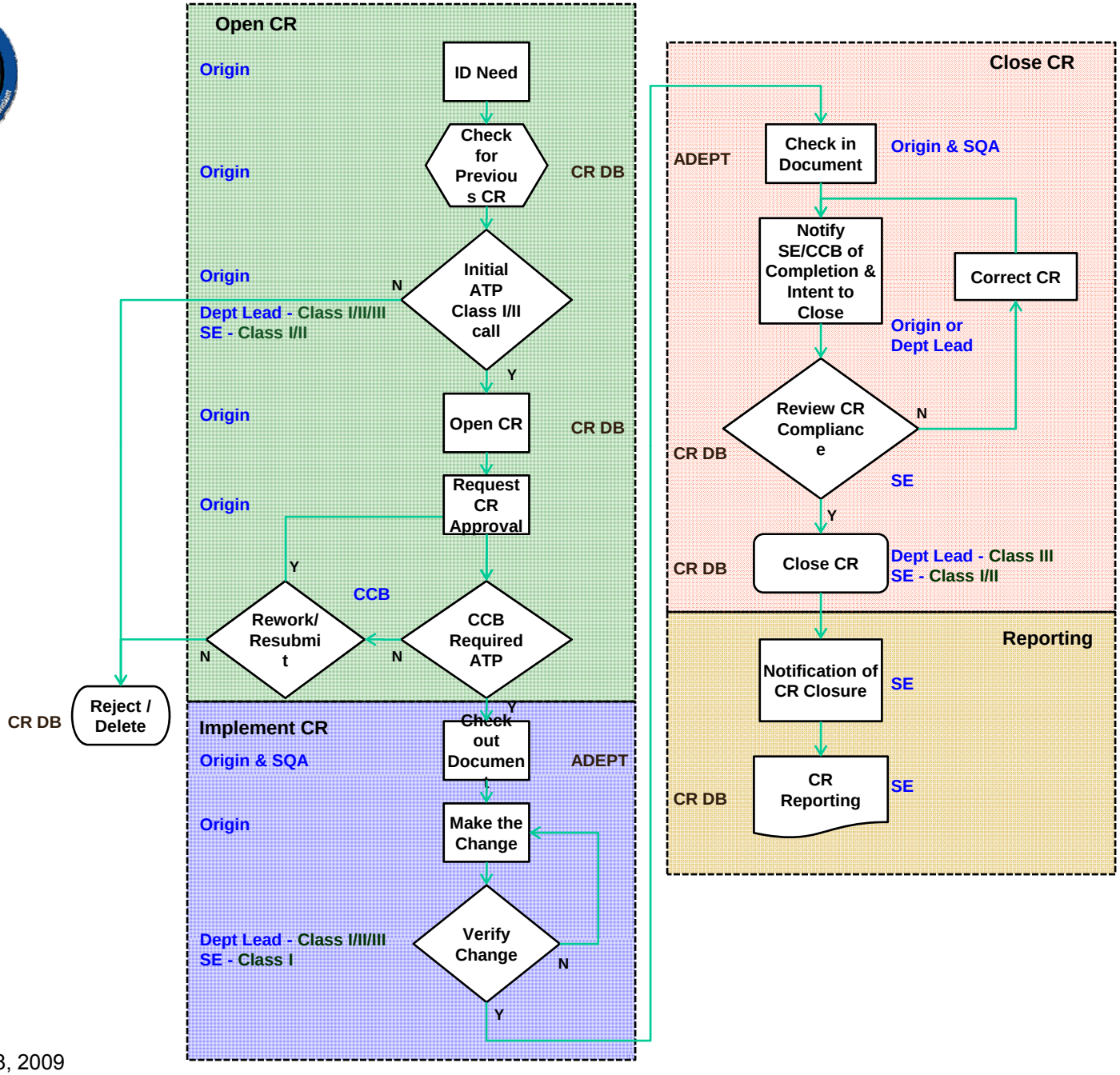
Open CR
Origin
ID Need
Origin
Check for Previous CR
CR DB
Origin
Initial ATP Class I/II call
N
Dept Lead - Class I/II/III
SE - Class I/II
Y
Origin
Open CR
CR DB
Origin
Request CR Approval
Y
CCB
Rework/ Resubmit
N
CCB Required ATP
N
CR DB
Reject / Delete
Y
Implement CR
Origin & SQA
Check out Document
ADEPT
Origin
Make the Change
Dept Lead - Class I/II/III
SE - Class I
Verify Change
N
Y
Close CR
ADEPT
Check in Document
Origin & SQA
Notify SE/CCB of Completion & Intent to Close
Correct CR
Origin or Dept Lead
Review CR Compliance
N
CR DB
SE
Y
CR DB
Close CR
Dept Lead - Class III
SE - Class I/II
Reporting
Notification of CR Closure
SE
CR DB
CR Reporting
SE

June 18, 2009

NSROC CR Process Quick-look

Purpose: Maximize configuration control on system changes with a minimum of impact on productivity and flexibility.

Typical CR is a Class II (one dept) or III (editorial correction) that requires minimal oversight.

Most Class I (multiple depts) CRs can be handled between Department Leads and SE through informal CCB.

Standard CR process flow.

- **Need for CR is discussed between Originator and Department Lead.**
- **Class III CRs receive ATP from Department Lead.**
- **For Class I/II CRs – CR screen shot is emailed to SE for Class I/II review and ATP.**
- **SE replies to email with ATP or questions, and annotates the CR in the SQA database with same info.**
- **Once work is done and reviewed by Department Lead, a request to close comes back through email.**
- **SE reviews CR for completeness and closes. Email notification sent back to Dept Lead & Originator.**

- **Class I incorrectly categorized as Class II is returned to Dept Lead with direction to gain approval from other Departments.**
- **Incomplete work or incomplete CR is returned for rework at check points in the process.**
- **CR open, implementation, and closure phases are easily accomplished in a few hours.**

Closing Remarks - Engineering

- Engineering Leading Indicators
  - Helps us optimize work force to match pressures of overall mission set
  - Helps us anticipate surges (though surges are usually pretty obvious)
- Engineering Risk Summary
  - Keeps attention on all risks
  - Identifies emerging risks early when they can be resolved with least impact
- Configuration Control Board process
  - Focusing on standardized systems, their specifications, and ***ownership***
  - Minimizes effort needed to use these systems on all missions
- Staffing and Recruiting
  - Focused and persistent recruiting is filling our strategic engineering needs
  - Building a staff base to meet engineering and mission management needs
- Overall Engineering Integrity
  - Focus on engineering discipline, rigor, and attention to detail
  - Development of our Systems Engineering practices

Conclusions

- NSROC is committed to the Sounding Rocket Program Success
- Satisfying the experimenter's requirements is our primary goal
- Our new teammates and staff are excited to be a part of the program
- Our leadership staff have been creative during the proposal efforts and the subcontractor transition
- Our technical innovations continue to enhance capabilities for the program
- We look forward to feedback from the SRWG